Dasher-2 Block Diagram

LDB-2 91.4RA01.001

Mar. 09, 2012

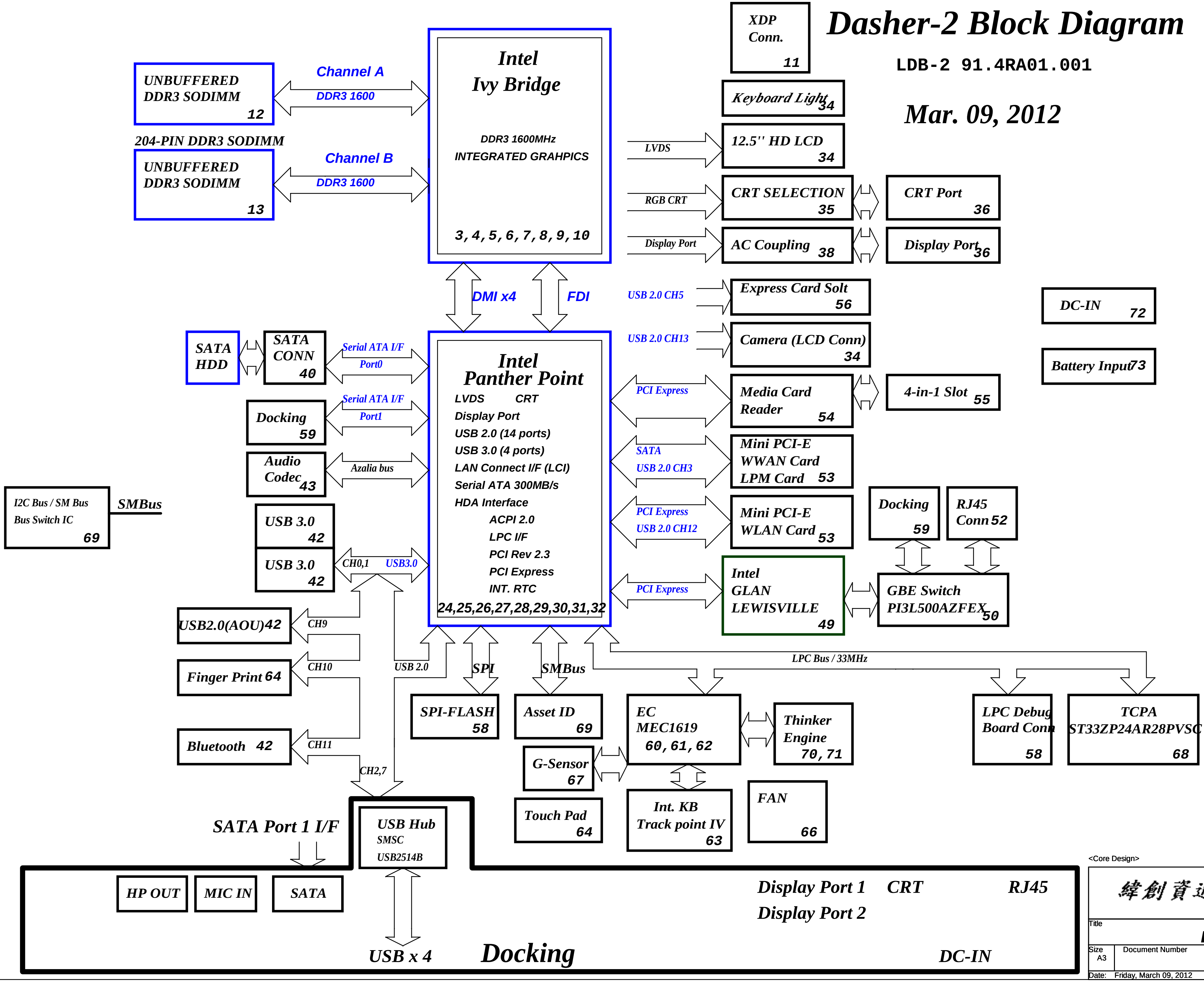
XDP Conn. 11
UNBUFFERED DDR3 SODIMM 12
Channel A
DDR3 1600
204-PIN DDR3 SODIMM
UNBUFFERED DDR3 SODIMM 13
Channel B
DDR3 1600
Intel Ivy Bridge
DDR3 1600MHz
INTEGRATED GRAHPICS
3,4,5,6,7,8,9,10
Keyboard Light 34
LVDS
12.5'' HD LCD 34
RGB CRT
CRT SELECTION 35
CRT Port 36
Display Port
AC Coupling 38
Display Port 36
DMI x4
FDI
USB 2.0 CH5
Express Card Solt 56
USB 2.0 CH13
Camera (LCD Conn) 34
DC-IN 72
Battery Input 73
SATA HDD
SATA CONN 40
Serial ATA I/F
Port0
Serial ATA I/F
Port1
Docking 59
Audio Codec 43
Azalia bus
I2C Bus / SM Bus
Bus Switch IC 69
SMBus
USB 3.0 42
USB 3.0 42
CH0,1
USB3.0
Intel Panther Point
LVDS CRT
Display Port
USB 2.0 (14 ports)
USB 3.0 (4 ports)
LAN Connect I/F (LCI)
Serial ATA 300MB/s
HDA Interface
ACPI 2.0
LPC I/F
PCI Rev 2.3
PCI Express
INT. RTC
24,25,26,27,28,29,30,31,32
PCI Express
Media Card Reader 54
4-in-1 Slot 55
SATA
USB 2.0 CH3
Mini PCI-E WWAN Card LPM Card 53
PCI Express
USB 2.0 CH12
Mini PCI-E WLAN Card 53
Docking 59
RJ45 Conn 52
PCI Express
Intel GLAN LEWISVILLE 49
GBE Switch PI3L500AZFEX 50
USB2.0(AOU) 42
CH9
Finger Print 64
CH10
USB 2.0
SPI
SMBus
LPC Bus / 33MHz
Bluetooth 42
CH11
CH2,7
SPI-FLASH 58
Asset ID 69
G-Sensor 67
Touch Pad 64
EC MEC1619 60,61,62
Thinker Engine 70,71
Int. KB Track point IV 63
FAN 66
LPC Debug Board Conn 58
TCPA ST33ZP24AR28PVSC 68
SATA Port 1 I/F
USB Hub SMSC USB2514B
HP OUT
MIC IN
SATA
Display Port 1
CRT
RJ45
Display Port 2
USB x 4
Docking
DC-IN

PCB Layer Stackup

L1:Component
L2:GND
L3:Signal 1
L4:VCC
L5:Signal 2
L6:Signal 3
L7:GND
L8:Component

			INPUTS	OUTPUTS
Battery Charger/Selector	BQ24760	74	DOCK_PWR20	CHARGER_OUT12
System DC/DC	TPS51220ARSN	78	VINT20	VCC5M VCC3M
CPU DC/DC	VT1318M/VT1324S	79	VCC5M_OUT	VCCCPUCORE
GMCH GFX CORE	VT1324S	80	VCC5M_OUT	VCCGFXCORE
VCC1R5A	VT357FCX	85	VCC5M_OUT	VCC1R5A
VCC0R75B	TPS51200DRCR	86	VCC1R5A	VCC0R75B
VCC1R8B	BD9139	89	VCC5M_OUT	VCC1R8B
VCC1R05AMT	VT356FCX	84	VCC5M_OUT	VCC1R05LAN
VCC1R05B_VTT	VT356	83	VCC5M_OUT	VCC1R05B_VTT
VCCSA	VT370	90	VCC5M_OUT	VCCSA

<Core Design>

緯創資通 **Wistron Corporation**
21F, 88, Sec.1, Hsin Tai Wu Rd., Hsichih,
Taipei Hsien 221, Taiwan, R.O.C.

Title
Block Diagram

Size A3 Document Number **Dasher-2** Rev -1

Date: Friday, March 09, 2012 Sheet 1 of 101

RESISTOR

Symbol name	Value	Tolerance (J: 5%, F: 1%, D: 0.5%, B: 0.1 %)	Rating 0402=> 1/16W, 25V 0603 => 1/16W, 75V 0805 => 1/10W, 100V	Size 2=>0402, 3=>0603, 5=>0805, 6=>1206, 0=>1210

The naming rule is value + R + size + tolerance
For the value, it can be read by the number before R. (R means resistor)
For the tolerance, it can be read from the last letter.
For the rating, we don't show on the symbol name.
For the size, R2=>0402, R3=>0603, R5=>0805,....

CAPACITOR

Symbol name	Value	Tolerance (M: +/-20, K: +/-10, Z: +80/-20)	Rating	Size 2=>0402, 3=>0603, 5=>0805, 6=>1206, 0=>1210

The naming rule is
Capacitor type + value + rating + size + tolerance + material
SCD1U10V2MX-1
SC=> SMT Ceremic, TC=> POS cap or SP cap
D1U => 0.1uF
10V => the voltage rating is 10V
2=> 0402, 3=>0603, 5=>0805
M=>tolerance M, K, Z
X=> X7R/X5R, Y=> Y5V
-1 => symbol version, nonsense to EE characteristic

PLANAR_ID[3..0]

IBEXPEAK-M	39	38	48	49	Planar ID Version	Planar PCB Version
PLANAR_IDn	3	2	1	0		
	0	0	0	0	Dasher-2 initial	N/A
	0	0	0	1	Dasher-2 PreDV	SA
	0	0	1	0	Dasher-2 SDV	SA
	0	0	1	1	Dasher-2 FVT	SB
	0	1	0	0	Dasher-2 PreSIT	SC
	0	1	0	1	Dasher-2 SIT	SD
	0	1	1	0	Dasher-2 SVT	-1
	0	1	1	1		
	1	0	0	0		
	1	0	0	1		
	1	0	1	0		

EC HISTORY

Stage	Date	EC No.	Page	Note

<Core Design>

緯創資通 **Wistron Corporation**
21F, 88, Sec.1, Hsin Tai Wu Rd., Hsichih,
Taipei Hsien 221, Taiwan, R.O.C.

Title
Reference

Size A3
Document Number **Dasher-2**
Rev **-1**

Date: Tuesday, February 21, 2012
Sheet 2 of 101

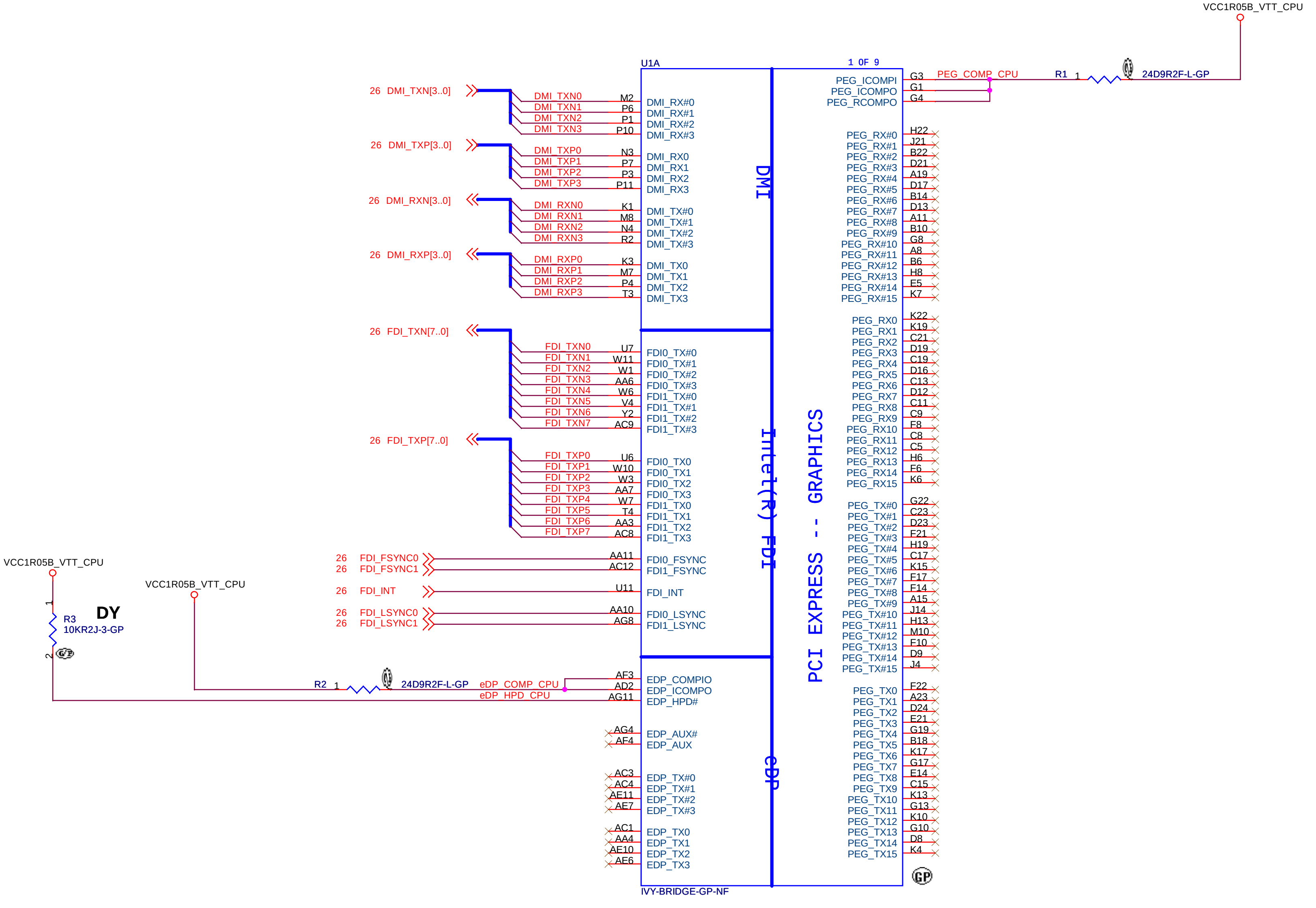
VCC1R05B_VTT_CPU
U1A
1 OF 9
26 DMI_TXN[3..0]
DMI_TXN0 M2 DMI_RX#0
DMI_TXN1 P6 DMI_RX#1
DMI_TXN2 P1 DMI_RX#2
DMI_TXN3 P10 DMI_RX#3
26 DMI_TXP[3..0]
DMI_TXP0 N3 DMI_RX0
DMI_TXP1 P7 DMI_RX1
DMI_TXP2 P3 DMI_RX2
DMI_TXP3 P11 DMI_RX3
26 DMI_RXN[3..0]
DMI_RXN0 K1 DMI_TX#0
DMI_RXN1 M8 DMI_TX#1
DMI_RXN2 N4 DMI_TX#2
DMI_RXN3 R2 DMI_TX#3
26 DMI_RXP[3..0]
DMI_RXP0 K3 DMI_TX0
DMI_RXP1 M7 DMI_TX1
DMI_RXP2 P4 DMI_TX2
DMI_RXP3 T3 DMI_TX3
DMI
26 FDI_TXN[7..0]
FDI_TXN0 U7 FDI0_TX#0
FDI_TXN1 W11 FDI0_TX#1
FDI_TXN2 W1 FDI0_TX#2
FDI_TXN3 AA6 FDI0_TX#3
FDI_TXN4 W6 FDI1_TX#0
FDI_TXN5 V4 FDI1_TX#1
FDI_TXN6 Y2 FDI1_TX#2
FDI_TXN7 AC9 FDI1_TX#3
26 FDI_TXP[7..0]
FDI_TXP0 U6 FDI0_TX0
FDI_TXP1 W10 FDI0_TX1
FDI_TXP2 W3 FDI0_TX2
FDI_TXP3 AA7 FDI0_TX3
FDI_TXP4 W7 FDI1_TX0
FDI_TXP5 T4 FDI1_TX1
FDI_TXP6 AA3 FDI1_TX2
FDI_TXP7 AC8 FDI1_TX3
26 FDI_FSYNC0 AA11 FDI0_FSYNC
26 FDI_FSYNC1 AC12 FDI1_FSYNC
26 FDI_INT U11 FDI_INT
26 FDI_LSYNC0 AA10 FDI0_LSYNC
26 FDI_LSYNC1 AG8 FDI1_LSYNC
Intel(R) FDI
VCC1R05B_VTT_CPU
1
R3
10KR2J-3-GP
2
DY
GP
VCC1R05B_VTT_CPU
R2 1
GP
24D9R2F-L-GP
eDP_COMP_CPU
eDP_HPD_CPU
AF3 EDP_COMPIO
AD2 EDP_ICOMPO
AG11 EDP_HPD#
AG4 EDP_AUX#
AF4 EDP_AUX
AC3 EDP_TX#0
AC4 EDP_TX#1
AE11 EDP_TX#2
AE7 EDP_TX#3
AC1 EDP_TX0
AA4 EDP_TX1
AE10 EDP_TX2
AE6 EDP_TX3
eDP
IVY-BRIDGE-GP-NF
PCI EXPRESS -- GRAPHICS
PEG_ICOMPI G3
PEG_ICOMPO G1
PEG_RCOMPO G4
PEG_COMP_CPU
R1 1
GP
24D9R2F-L-GP
VCC1R05B_VTT_CPU
PEG_RX#0 H22
PEG_RX#1 J21
PEG_RX#2 B22
PEG_RX#3 D21
PEG_RX#4 A19
PEG_RX#5 D17
PEG_RX#6 B14
PEG_RX#7 D13
PEG_RX#8 A11
PEG_RX#9 B10
PEG_RX#10 G8
PEG_RX#11 A8
PEG_RX#12 B6
PEG_RX#13 H8
PEG_RX#14 E5
PEG_RX#15 K7
PEG_RX0 K22
PEG_RX1 K19
PEG_RX2 C21
PEG_RX3 D19
PEG_RX4 C19
PEG_RX5 D16
PEG_RX6 C13
PEG_RX7 D12
PEG_RX8 C11
PEG_RX9 C9
PEG_RX10 F8
PEG_RX11 C8
PEG_RX12 C5
PEG_RX13 H6
PEG_RX14 F6
PEG_RX15 K6
PEG_TX#0 G22
PEG_TX#1 C23
PEG_TX#2 D23
PEG_TX#3 F21
PEG_TX#4 H19
PEG_TX#5 C17
PEG_TX#6 K15
PEG_TX#7 F17
PEG_TX#8 F14
PEG_TX#9 A15
PEG_TX#10 J14
PEG_TX#11 H13
PEG_TX#12 M10
PEG_TX#13 F10
PEG_TX#14 D9
PEG_TX#15 J4
PEG_TX0 F22
PEG_TX1 A23
PEG_TX2 D24
PEG_TX3 E21
PEG_TX4 G19
PEG_TX5 B18
PEG_TX6 K17
PEG_TX7 G17
PEG_TX8 E14
PEG_TX9 C15
PEG_TX10 K13
PEG_TX11 G13
PEG_TX12 K10
PEG_TX13 G10
PEG_TX14 D8
PEG_TX15 K4
GP

<Core Design>

緯創資通 **Wistron Corporation**
21F, 88, Sec.1, Hsin Tai Wu Rd., Hsichih,
Taipei Hsien 221, Taiwan, R.O.C.

Title
CPU(1/8):DMI/EDP/PEG/FDI

Size	Document Number	Rev
A3	Dasher-2	-1

Date: Friday, March 09, 2012 Sheet 3 of 101

Table -PROC_SELECT(-PROC_IVY)

Sandy Bridge	High
Ivy Bridge	Low

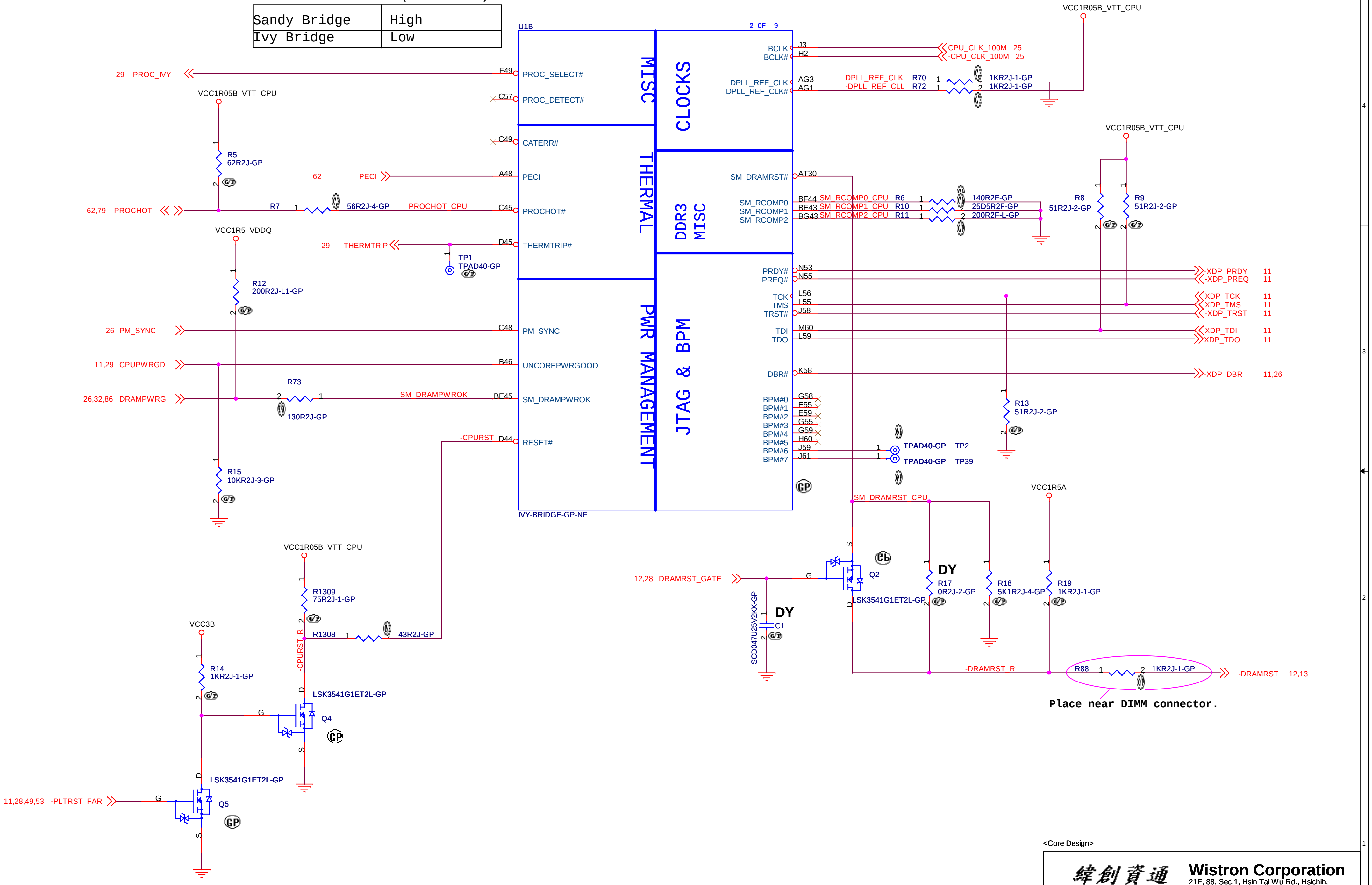
U1B
2 OF 9
MISC
CLOCKS
THERMAL
DDR3 MISC
PWR MANAGEMENT
JTAG & BPM
IVY-BRIDGE-GP-NF
29 -PROC_IVY
F49 PROC_SELECT#
C57 PROC_DETECT#
C49 CATERR#
62 PECI
A48 PECI
VCC1R05B_VTT_CPU
R5
62R2J-GP
62,79 -PROCHOT
R7
56R2J-4-GP
PROCHOT_CPU
C45 PROCHOT#
VCC1R5_VDDQ
29 -THERMTRIP
D45 THERMTRIP#
TP1
TPAD40-GP
R12
200R2J-L1-GP
26 PM_SYNC
C48 PM_SYNC
11,29 CPUPWRGD
B46 UNCOREPWRGOOD
R73
26,32,86 DRAMPWRG
130R2J-GP
SM_DRAMPWROK
BE45 SM_DRAMPWROK
-CPURST
D44 RESET#
R15
10KR2J-3-GP
BCLK J3
BCLK# H2
CPU_CLK_100M 25
-CPU_CLK_100M 25
DPLL_REF_CLK AG3
DPLL_REF_CLK# AG1
DPLL_REF_CLK R70
-DPLL_REF_CLK R72
1KR2J-1-GP
1KR2J-1-GP
VCC1R05B_VTT_CPU
SM_DRAMRST# AT30
SM_RCOMP0 BF44 SM_RCOMP0_CPU R6 140R2F-GP
SM_RCOMP1 BE43 SM_RCOMP1_CPU R10 25D5R2F-GP
SM_RCOMP2 BG43 SM_RCOMP2_CPU R11 200R2F-L-GP
R8
51R2J-2-GP
R9
51R2J-2-GP
VCC1R05B_VTT_CPU
PRDY# N53 -XDP_PRDY 11
PREQ# N55 -XDP_PREQ 11
TCK L56 XDP_TCK 11
TMS L55 XDP_TMS 11
TRST# J58 -XDP_TRST 11
TDI M60 XDP_TDI 11
TDO L59 XDP_TDO 11
DBR# K58 -XDP_DBR 11,26
BPM#0 G58
BPM#1 E55
BPM#2 E59
BPM#3 G55
BPM#4 G59
BPM#5 H60
BPM#6 J59
BPM#7 J61
TPAD40-GP TP2
TPAD40-GP TP39
R13
51R2J-2-GP
VCC1R5A
SM_DRAMRST_CPU
12,28 DRAMRST_GATE
Q2
LSK3541G1ET2L-GP
DY
R17
0R2J-2-GP
R18
5K1R2J-4-GP
R19
1KR2J-1-GP
SCD047U25V2KX-GP
DY
C1
-DRAMRST_R
R88
1KR2J-1-GP
-DRAMRST 12,13
Place near DIMM connector.
VCC1R05B_VTT_CPU
R1309
75R2J-1-GP
R1308
43R2J-GP
-CPURST_R
VCC3B
R14
1KR2J-1-GP
LSK3541G1ET2L-GP
Q4
LSK3541G1ET2L-GP
Q5
11,28,49,53 -PLTRST_FAR

<Core Design>

Wistron Corporation
緯創資通
21F, 88, Sec.1, Hsin Tai Wu Rd., Hsichih,
Taipei Hsien 221, Taiwan, R.O.C.

Title	CPU(2/8):CLK/MISC/JTAG	
Size A3	Document Number Dasher-2	Rev -1
Date: Friday, March 09, 2012	Sheet 4 of 101	

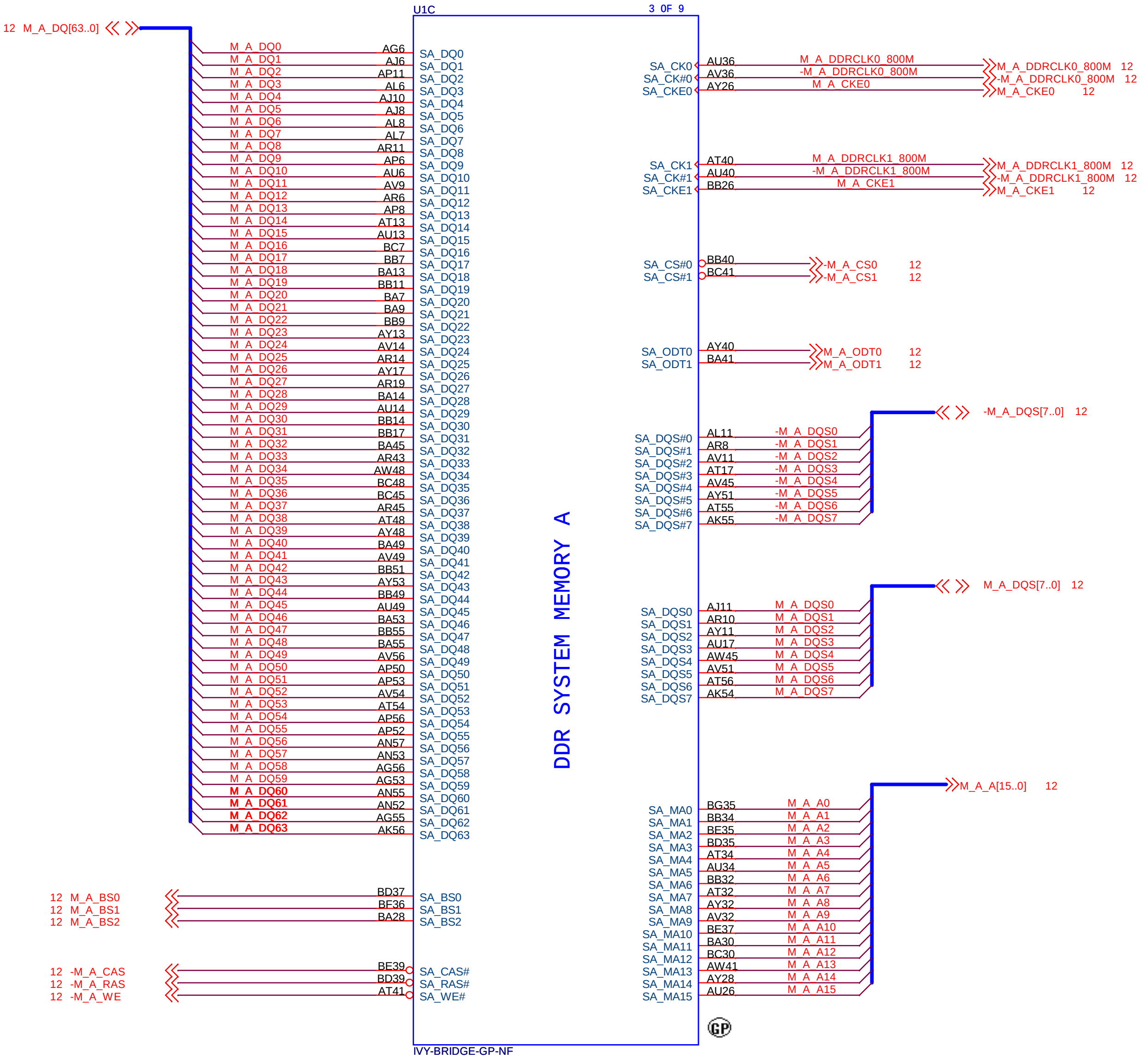
U1C
3 OF 9
DDR SYSTEM MEMORY A
IVY-BRIDGE-GP-NF
12 M_A_DQ[63..0]
M_A_DQ0 AG6 SA_DQ0
M_A_DQ1 AJ6 SA_DQ1
M_A_DQ2 AP11 SA_DQ2
M_A_DQ3 AL6 SA_DQ3
M_A_DQ4 AJ10 SA_DQ4
M_A_DQ5 AJ8 SA_DQ5
M_A_DQ6 AL8 SA_DQ6
M_A_DQ7 AL7 SA_DQ7
M_A_DQ8 AR11 SA_DQ8
M_A_DQ9 AP6 SA_DQ9
M_A_DQ10 AU6 SA_DQ10
M_A_DQ11 AV9 SA_DQ11
M_A_DQ12 AR6 SA_DQ12
M_A_DQ13 AP8 SA_DQ13
M_A_DQ14 AT13 SA_DQ14
M_A_DQ15 AU13 SA_DQ15
M_A_DQ16 BC7 SA_DQ16
M_A_DQ17 BB7 SA_DQ17
M_A_DQ18 BA13 SA_DQ18
M_A_DQ19 BB11 SA_DQ19
M_A_DQ20 BA7 SA_DQ20
M_A_DQ21 BA9 SA_DQ21
M_A_DQ22 BB9 SA_DQ22
M_A_DQ23 AY13 SA_DQ23
M_A_DQ24 AV14 SA_DQ24
M_A_DQ25 AR14 SA_DQ25
M_A_DQ26 AY17 SA_DQ26
M_A_DQ27 AR19 SA_DQ27
M_A_DQ28 BA14 SA_DQ28
M_A_DQ29 AU14 SA_DQ29
M_A_DQ30 BB14 SA_DQ30
M_A_DQ31 BB17 SA_DQ31
M_A_DQ32 BA45 SA_DQ32
M_A_DQ33 AR43 SA_DQ33
M_A_DQ34 AW48 SA_DQ34
M_A_DQ35 BC48 SA_DQ35
M_A_DQ36 BC45 SA_DQ36
M_A_DQ37 AR45 SA_DQ37
M_A_DQ38 AT48 SA_DQ38
M_A_DQ39 AY48 SA_DQ39
M_A_DQ40 BA49 SA_DQ40
M_A_DQ41 AV49 SA_DQ41
M_A_DQ42 BB51 SA_DQ42
M_A_DQ43 AY53 SA_DQ43
M_A_DQ44 BB49 SA_DQ44
M_A_DQ45 AU49 SA_DQ45
M_A_DQ46 BA53 SA_DQ46
M_A_DQ47 BB55 SA_DQ47
M_A_DQ48 BA55 SA_DQ48
M_A_DQ49 AV56 SA_DQ49
M_A_DQ50 AP50 SA_DQ50
M_A_DQ51 AP53 SA_DQ51
M_A_DQ52 AV54 SA_DQ52
M_A_DQ53 AT54 SA_DQ53
M_A_DQ54 AP56 SA_DQ54
M_A_DQ55 AP52 SA_DQ55
M_A_DQ56 AN57 SA_DQ56
M_A_DQ57 AN53 SA_DQ57
M_A_DQ58 AG56 SA_DQ58
M_A_DQ59 AG53 SA_DQ59
M_A_DQ60 AN55 SA_DQ60
M_A_DQ61 AN52 SA_DQ61
M_A_DQ62 AG55 SA_DQ62
M_A_DQ63 AK56 SA_DQ63
12 M_A_BS0 BD37 SA_BS0
12 M_A_BS1 BF36 SA_BS1
12 M_A_BS2 BA28 SA_BS2
12 -M_A_CAS BE39 SA_CAS#
12 -M_A_RAS BD39 SA_RAS#
12 -M_A_WE AT41 SA_WE#
SA_CK0 AU36 M_A_DDRCLK0_800M M_A_DDRCLK0_800M 12
SA_CK#0 AV36 -M_A_DDRCLK0_800M -M_A_DDRCLK0_800M 12
SA_CKE0 AY26 M_A_CKE0 M_A_CKE0 12
SA_CK1 AT40 M_A_DDRCLK1_800M M_A_DDRCLK1_800M 12
SA_CK#1 AU40 -M_A_DDRCLK1_800M -M_A_DDRCLK1_800M 12
SA_CKE1 BB26 M_A_CKE1 M_A_CKE1 12
SA_CS#0 BB40 -M_A_CS0 12
SA_CS#1 BC41 -M_A_CS1 12
SA_ODT0 AY40 M_A_ODT0 12
SA_ODT1 BA41 M_A_ODT1 12
-M_A_DQS[7..0] 12
SA_DQS#0 AL11 -M_A_DQS0
SA_DQS#1 AR8 -M_A_DQS1
SA_DQS#2 AV11 -M_A_DQS2
SA_DQS#3 AT17 -M_A_DQS3
SA_DQS#4 AV45 -M_A_DQS4
SA_DQS#5 AY51 -M_A_DQS5
SA_DQS#6 AT55 -M_A_DQS6
SA_DQS#7 AK55 -M_A_DQS7
M_A_DQS[7..0] 12
SA_DQS0 AJ11 M_A_DQS0
SA_DQS1 AR10 M_A_DQS1
SA_DQS2 AY11 M_A_DQS2
SA_DQS3 AU17 M_A_DQS3
SA_DQS4 AW45 M_A_DQS4
SA_DQS5 AV51 M_A_DQS5
SA_DQS6 AT56 M_A_DQS6
SA_DQS7 AK54 M_A_DQS7
M_A_A[15..0] 12
SA_MA0 BG35 M_A_A0
SA_MA1 BB34 M_A_A1
SA_MA2 BE35 M_A_A2
SA_MA3 BD35 M_A_A3
SA_MA4 AT34 M_A_A4
SA_MA5 AU34 M_A_A5
SA_MA6 BB32 M_A_A6
SA_MA7 AT32 M_A_A7
SA_MA8 AY32 M_A_A8
SA_MA9 AV32 M_A_A9
SA_MA10 BE37 M_A_A10
SA_MA11 BA30 M_A_A11
SA_MA12 BC30 M_A_A12
SA_MA13 AW41 M_A_A13
SA_MA14 AY28 M_A_A14
SA_MA15 AU26 M_A_A15
GP

<Core Design>

緯創資通 **Wistron Corporation**
21F, 88, Sec.1, Hsin Tai Wu Rd., Hsichih,
Taipei Hsien 221, Taiwan, R.O.C.

Title
CPU(3/8):DDR3 Channel-A

Size	Document Number	Rev
A3	**Dasher-2**	-1

Date: Friday, March 09, 2012 Sheet 5 of 101

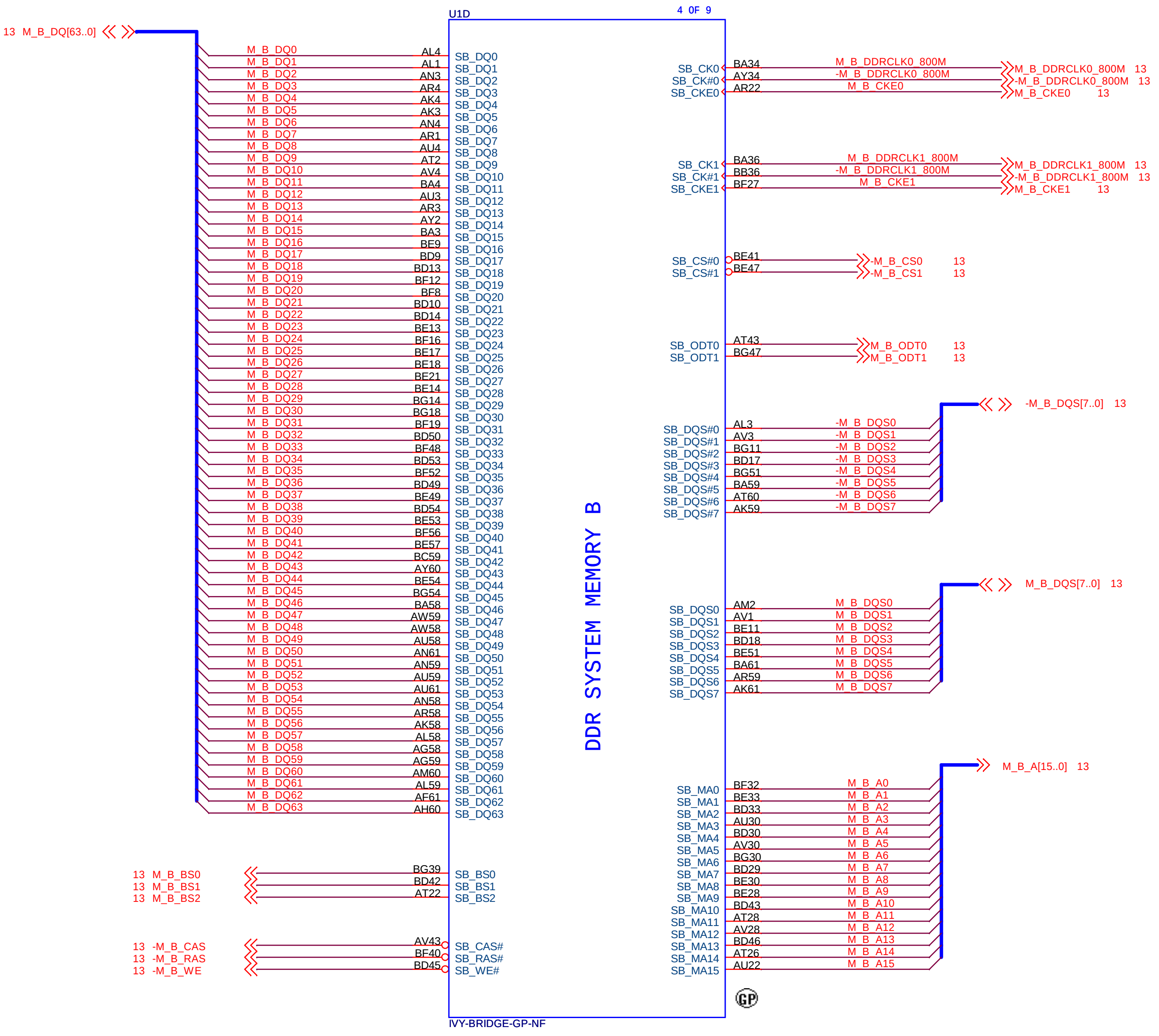
13 M_B_DQ[63..0]
U1D
4 OF 9
DDR SYSTEM MEMORY B
IVY-BRIDGE-GP-NF
M_B_DQ0 AL4 SB_DQ0
M_B_DQ1 AL1 SB_DQ1
M_B_DQ2 AN3 SB_DQ2
M_B_DQ3 AR4 SB_DQ3
M_B_DQ4 AK4 SB_DQ4
M_B_DQ5 AK3 SB_DQ5
M_B_DQ6 AN4 SB_DQ6
M_B_DQ7 AR1 SB_DQ7
M_B_DQ8 AU4 SB_DQ8
M_B_DQ9 AT2 SB_DQ9
M_B_DQ10 AV4 SB_DQ10
M_B_DQ11 BA4 SB_DQ11
M_B_DQ12 AU3 SB_DQ12
M_B_DQ13 AR3 SB_DQ13
M_B_DQ14 AY2 SB_DQ14
M_B_DQ15 BA3 SB_DQ15
M_B_DQ16 BE9 SB_DQ16
M_B_DQ17 BD9 SB_DQ17
M_B_DQ18 BD13 SB_DQ18
M_B_DQ19 BF12 SB_DQ19
M_B_DQ20 BF8 SB_DQ20
M_B_DQ21 BD10 SB_DQ21
M_B_DQ22 BD14 SB_DQ22
M_B_DQ23 BE13 SB_DQ23
M_B_DQ24 BF16 SB_DQ24
M_B_DQ25 BE17 SB_DQ25
M_B_DQ26 BE18 SB_DQ26
M_B_DQ27 BE21 SB_DQ27
M_B_DQ28 BE14 SB_DQ28
M_B_DQ29 BG14 SB_DQ29
M_B_DQ30 BG18 SB_DQ30
M_B_DQ31 BF19 SB_DQ31
M_B_DQ32 BD50 SB_DQ32
M_B_DQ33 BF48 SB_DQ33
M_B_DQ34 BD53 SB_DQ34
M_B_DQ35 BF52 SB_DQ35
M_B_DQ36 BD49 SB_DQ36
M_B_DQ37 BE49 SB_DQ37
M_B_DQ38 BD54 SB_DQ38
M_B_DQ39 BE53 SB_DQ39
M_B_DQ40 BF56 SB_DQ40
M_B_DQ41 BE57 SB_DQ41
M_B_DQ42 BC59 SB_DQ42
M_B_DQ43 AY60 SB_DQ43
M_B_DQ44 BE54 SB_DQ44
M_B_DQ45 BG54 SB_DQ45
M_B_DQ46 BA58 SB_DQ46
M_B_DQ47 AW59 SB_DQ47
M_B_DQ48 AW58 SB_DQ48
M_B_DQ49 AU58 SB_DQ49
M_B_DQ50 AN61 SB_DQ50
M_B_DQ51 AN59 SB_DQ51
M_B_DQ52 AU59 SB_DQ52
M_B_DQ53 AU61 SB_DQ53
M_B_DQ54 AN58 SB_DQ54
M_B_DQ55 AR58 SB_DQ55
M_B_DQ56 AK58 SB_DQ56
M_B_DQ57 AL58 SB_DQ57
M_B_DQ58 AG58 SB_DQ58
M_B_DQ59 AG59 SB_DQ59
M_B_DQ60 AM60 SB_DQ60
M_B_DQ61 AL59 SB_DQ61
M_B_DQ62 AF61 SB_DQ62
M_B_DQ63 AH60 SB_DQ63
13 M_B_BS0 BG39 SB_BS0
13 M_B_BS1 BD42 SB_BS1
13 M_B_BS2 AT22 SB_BS2
13 -M_B_CAS AV43 SB_CAS#
13 -M_B_RAS BF40 SB_RAS#
13 -M_B_WE BD45 SB_WE#
SB_CK0 BA34 M_B_DDRCLK0_800M 13
SB_CK#0 AY34 -M_B_DDRCLK0_800M 13
SB_CKE0 AR22 M_B_CKE0 13
SB_CK1 BA36 M_B_DDRCLK1_800M 13
SB_CK#1 BB36 -M_B_DDRCLK1_800M 13
SB_CKE1 BF27 M_B_CKE1 13
SB_CS#0 BE41 -M_B_CS0 13
SB_CS#1 BE47 -M_B_CS1 13
SB_ODT0 AT43 M_B_ODT0 13
SB_ODT1 BG47 M_B_ODT1 13
-M_B_DQS[7..0] 13
SB_DQS#0 AL3 -M_B_DQS0
SB_DQS#1 AV3 -M_B_DQS1
SB_DQS#2 BG11 -M_B_DQS2
SB_DQS#3 BD17 -M_B_DQS3
SB_DQS#4 BG51 -M_B_DQS4
SB_DQS#5 BA59 -M_B_DQS5
SB_DQS#6 AT60 -M_B_DQS6
SB_DQS#7 AK59 -M_B_DQS7
M_B_DQS[7..0] 13
SB_DQS0 AM2 M_B_DQS0
SB_DQS1 AV1 M_B_DQS1
SB_DQS2 BE11 M_B_DQS2
SB_DQS3 BD18 M_B_DQS3
SB_DQS4 BE51 M_B_DQS4
SB_DQS5 BA61 M_B_DQS5
SB_DQS6 AR59 M_B_DQS6
SB_DQS7 AK61 M_B_DQS7
M_B_A[15..0] 13
SB_MA0 BF32 M_B_A0
SB_MA1 BE33 M_B_A1
SB_MA2 BD33 M_B_A2
SB_MA3 AU30 M_B_A3
SB_MA4 BD30 M_B_A4
SB_MA5 AV30 M_B_A5
SB_MA6 BG30 M_B_A6
SB_MA7 BD29 M_B_A7
SB_MA8 BE30 M_B_A8
SB_MA9 BE28 M_B_A9
SB_MA10 BD43 M_B_A10
SB_MA11 AT28 M_B_A11
SB_MA12 AV28 M_B_A12
SB_MA13 BD46 M_B_A13
SB_MA14 AT26 M_B_A14
SB_MA15 AU22 M_B_A15
GP

<Core Design>

緯創資通 **Wistron Corporation**
21F, 88, Sec.1, Hsin Tai Wu Rd., Hsichih,
Taipei Hsien 221, Taiwan, R.O.C.

Title	**CPU(4/8):DDR3 Channel-B**	
Size A3	Document Number **Dasher-2**	Rev -1
Date: Friday, March 09, 2012	Sheet 6 of 101	

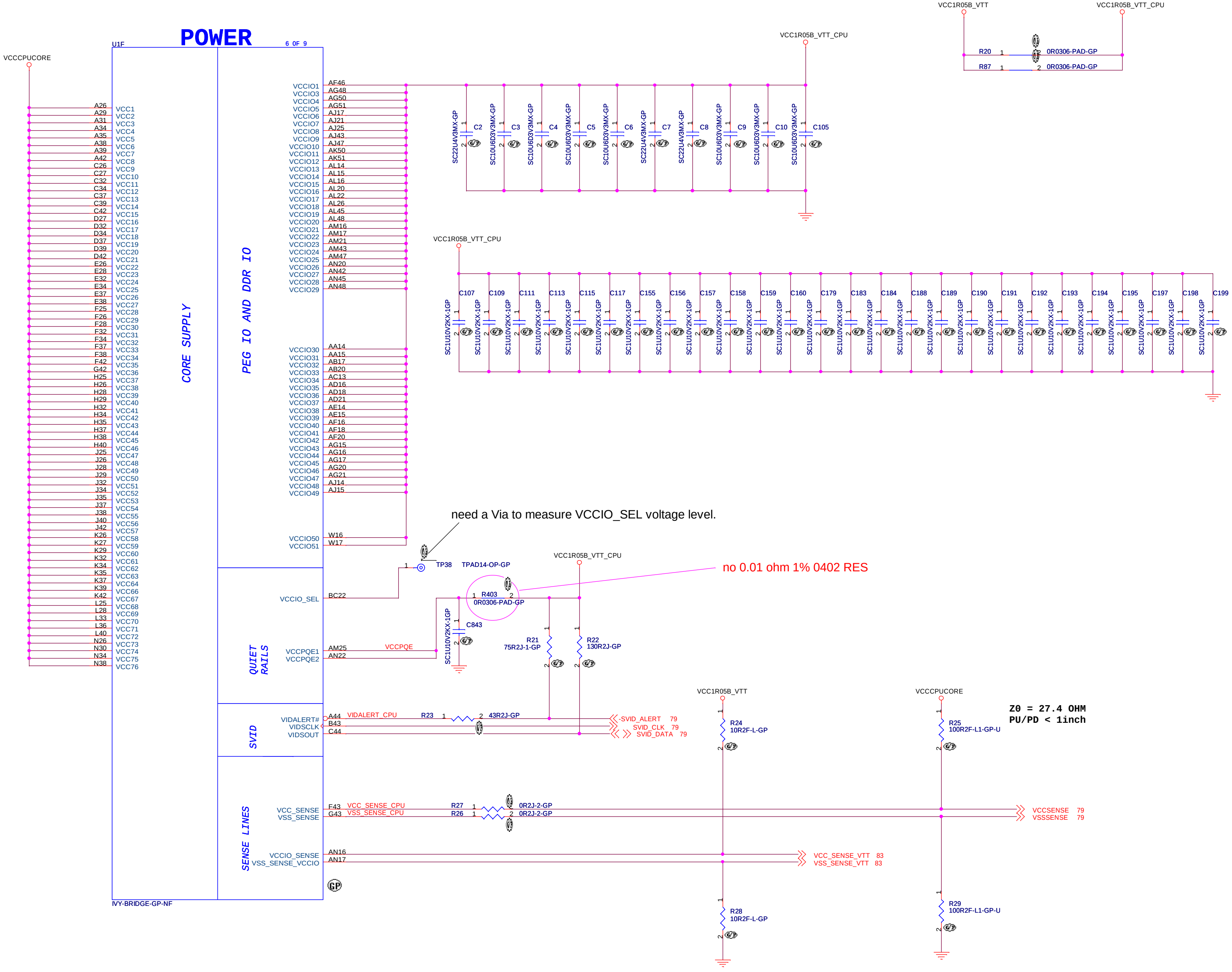
POWER
U1F
6 0F 9
VCCCPUCORE
CORE SUPPLY
PEG IO AND DDR IO
QUIET RAILS
SVID
SENSE LINES
A26 VCC1
A29 VCC2
A31 VCC3
A34 VCC4
A35 VCC5
A38 VCC6
A39 VCC7
A42 VCC8
C26 VCC9
C27 VCC10
C32 VCC11
C34 VCC12
C37 VCC13
C39 VCC14
C42 VCC15
D27 VCC16
D32 VCC17
D34 VCC18
D37 VCC19
D39 VCC20
D42 VCC21
E26 VCC22
E28 VCC23
E32 VCC24
E34 VCC25
E37 VCC26
E38 VCC27
F25 VCC28
F26 VCC29
F28 VCC30
F32 VCC31
F34 VCC32
F37 VCC33
F38 VCC34
F42 VCC35
G42 VCC36
H25 VCC37
H26 VCC38
H28 VCC39
H29 VCC40
H32 VCC41
H34 VCC42
H35 VCC43
H37 VCC44
H38 VCC45
H40 VCC46
J25 VCC47
J26 VCC48
J28 VCC49
J29 VCC50
J32 VCC51
J34 VCC52
J35 VCC53
J37 VCC54
J38 VCC55
J40 VCC56
J42 VCC57
K26 VCC58
K27 VCC59
K29 VCC60
K32 VCC61
K34 VCC62
K35 VCC63
K37 VCC64
K39 VCC66
K42 VCC67
L25 VCC68
L28 VCC69
L33 VCC70
L36 VCC71
L40 VCC72
N26 VCC73
N30 VCC74
N34 VCC75
N38 VCC76
VCCIO1 AF46
VCCIO3 AG48
VCCIO4 AG50
VCCIO5 AG51
VCCIO6 AJ17
VCCIO7 AJ21
VCCIO8 AJ25
VCCIO9 AJ43
VCCIO10 AJ47
VCCIO11 AK50
VCCIO12 AK51
VCCIO13 AL14
VCCIO14 AL15
VCCIO15 AL16
VCCIO16 AL20
VCCIO17 AL22
VCCIO18 AL26
VCCIO19 AL45
VCCIO20 AL48
VCCIO21 AM16
VCCIO22 AM17
VCCIO23 AM21
VCCIO24 AM43
VCCIO25 AM47
VCCIO26 AN20
VCCIO27 AN42
VCCIO28 AN45
VCCIO29 AN48
VCCIO30 AA14
VCCIO31 AA15
VCCIO32 AB17
VCCIO33 AB20
VCCIO34 AC13
VCCIO35 AD16
VCCIO36 AD18
VCCIO37 AD21
VCCIO38 AE14
VCCIO39 AE15
VCCIO40 AF16
VCCIO41 AF18
VCCIO42 AF20
VCCIO43 AG15
VCCIO44 AG16
VCCIO45 AG17
VCCIO46 AG20
VCCIO47 AG21
VCCIO48 AJ14
VCCIO49 AJ15
VCCIO50 W16
VCCIO51 W17
VCCIO_SEL BC22
VCCPQE1 AM25
VCCPQE2 AN22
VCCPQE
VIDALERT# A44
VIDSCLK B43
VIDSOUT C44
VCC_SENSE F43
VSS_SENSE G43
VCCIO_SENSE AN16
VSS_SENSE_VCCIO AN17
IVY-BRIDGE-GP-NF
VCC1R05B_VTT_CPU
C2 SC22U4V3MX-GP
C3 SC10U6D3V3MX-GP
C4 SC10U6D3V3MX-GP
C5 SC10U6D3V3MX-GP
C6 SC10U6D3V3MX-GP
C7 SC22U4V3MX-GP
C8 SC22U4V3MX-GP
C9 SC10U6D3V3MX-GP
C10 SC10U6D3V3MX-GP
C105 SC10U6D3V3MX-GP
VCC1R05B_VTT_CPU
C107 C109 C111 C113 C115 C117 C155 C156 C157 C158 C159 C160 C179 C183 C184 C188 C189 C190 C191 C192 C193 C194 C195 C197 C198 C199
SC1U10V2KX-1GP
VCC1R05B_VTT
VCC1R05B_VTT_CPU
R20 1 2 0R0306-PAD-GP
R87 1 2 0R0306-PAD-GP
1 TP38 TPAD14-OP-GP
VCC1R05B_VTT_CPU
1 R403 2 0R0306-PAD-GP
C843 SC1U10V2KX-1GP
R21 75R2J-1-GP
R22 130R2J-GP
VIDALERT_CPU
R23 1 2 43R2J-GP
-SVID_ALERT 79
SVID_CLK 79
SVID_DATA 79
VCC_SENSE_CPU
VSS_SENSE_CPU
R27 1 0R2J-2-GP
R26 1 2 0R2J-2-GP
VCC1R05B_VTT
R24 10R2F-L-GP
R28 10R2F-L-GP
VCCCPUCORE
R25 100R2F-L1-GP-U
R29 100R2F-L1-GP-U
VCCSENSE 79
VSSSENSE 79
VCC_SENSE_VTT 83
VSS_SENSE_VTT 83
GP

need a Via to measure VCCIO_SEL voltage level.

no 0.01 ohm 1% 0402 RES

Z0 = 27.4 OHM
PU/PD < 1inch

<Core Design>

緯創資通 **Wistron Corporation**
21F, 88, Sec.1, Hsin Tai Wu Rd., Hsichih,
Taipei Hsien 221, Taiwan, R.O.C.

Title **CPU(5/8):Processor Power**

Size A2
Document Number **Dasher-2**
Rev -1
Date: Friday, March 09, 2012
Sheet 7 of 101

POWER

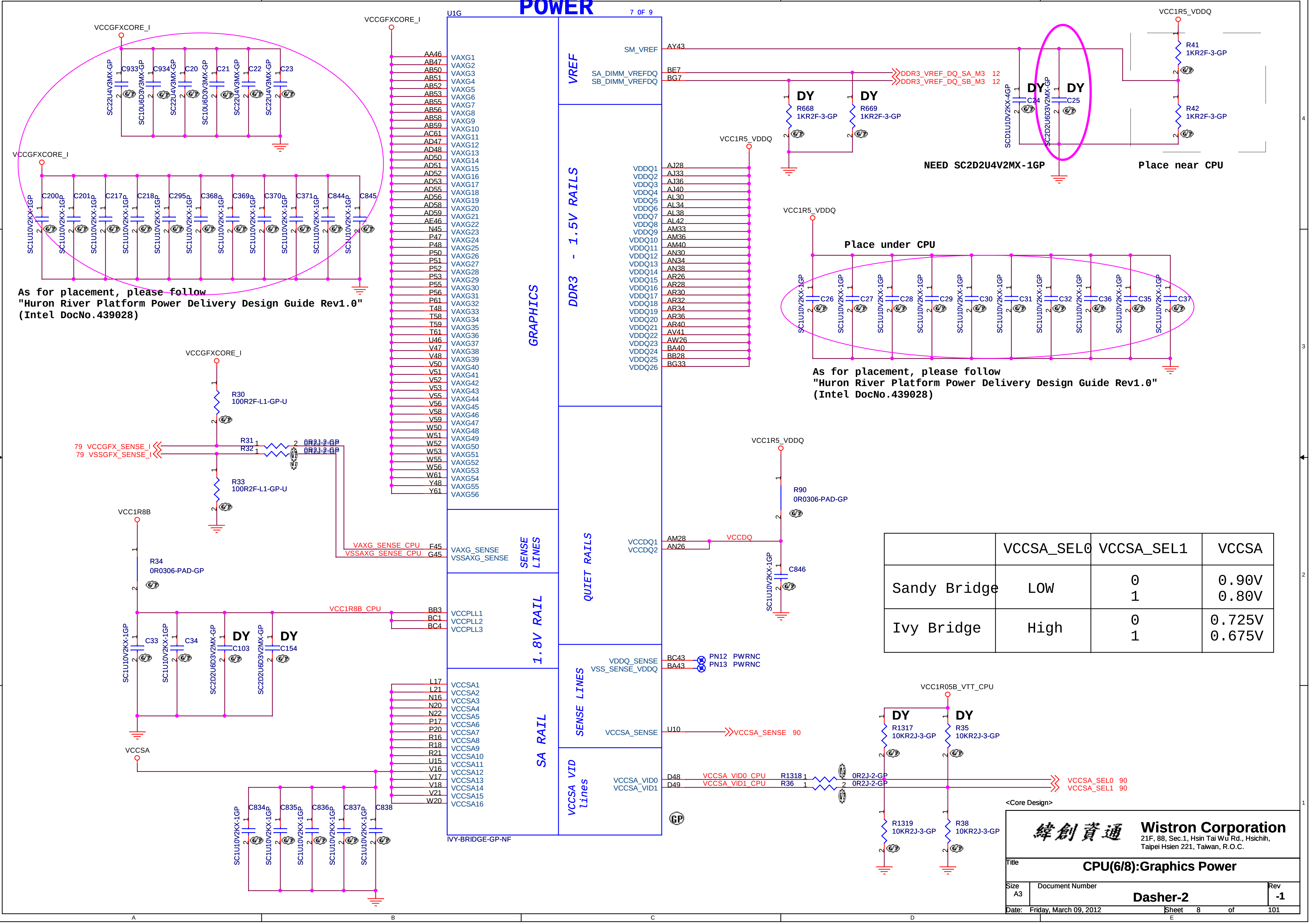
U1G
7 OF 9
GRAPHICS
VREF
DDR3 - 1.5V RAILS
SENSE LINES
1.8V RAIL
SA RAIL
QUIET RAILS
VCCSA VID lines
VCCGFXCORE_I
AA46 AB47 AB50 AB51 AB52 AB53 AB55 AB56 AB58 AB59 AC61 AD47 AD48 AD50 AD51 AD52 AD53 AD55 AD56 AD58 AD59 AE46 N45 P47 P48 P50 P51 P52 P53 P55 P56 P61 T48 T58 T59 T61 U46 V47 V48 V50 V51 V52 V53 V55 V56 V58 V59 W50 W51 W52 W53 W55 W56 W61 Y48 Y61
VAXG1 … VAXG56
F45 VAXG_SENSE
G45 VSSAXG_SENSE
VAXG_SENSE_CPU
VSSAXG_SENSE_CPU
BB3 VCCPLL1
BC1 VCCPLL2
BC4 VCCPLL3
VCC1R8B_CPU
L17 L21 N16 N20 N22 P17 P20 R16 R18 R21 U15 V16 V17 V18 V21 W20
VCCSA1 … VCCSA16
IVY-BRIDGE-GP-NF
AY43 SM_VREF
BE7 SA_DIMM_VREFDQ
BG7 SB_DIMM_VREFDQ
DDR3_VREF_DQ_SA_M3 12
DDR3_VREF_DQ_SB_M3 12
AJ28 AJ33 AJ36 AJ40 AL30 AL34 AL38 AL42 AM33 AM36 AM40 AN30 AN34 AN38 AR26 AR28 AR30 AR32 AR34 AR36 AR40 AV41 AW26 BA40 BB28 BG33
VDDQ1 … VDDQ26
AM28 VCCDQ1
AN26 VCCDQ2
VCCDQ
BC43 VDDQ_SENSE
BA43 VSS_SENSE_VDDQ
PN12 PWRNC
PN13 PWRNC
U10 VCCSA_SENSE
VCCSA_SENSE 90
D48 VCCSA_VID0
D49 VCCSA_VID1
VCCSA_VID0_CPU
VCCSA_VID1_CPU
R1318 0R2J-2-GP
R36 0R2J-2-GP
VCCSA_SEL0 90
VCCSA_SEL1 90
VCC1R05B_VTT_CPU
DY R1317 10KR2J-3-GP
DY R35 10KR2J-3-GP
R1319 10KR2J-3-GP
R38 10KR2J-3-GP
VCC1R5_VDDQ
R41 1KR2F-3-GP
R42 1KR2F-3-GP
DY R668 1KR2F-3-GP
DY R669 1KR2F-3-GP
DY C24 SC1U10V2KX-4GP
DY C25 SC2D2U6D3V2MX-GP
C933 C934 C20 C21 C22 C23
SC22U4V3MX-GP SC10U6D3V3MX-GP
C200 C201 C217 C218 C295 C368 C369 C370 C371 C844 C845
SC1U10V2KX-1GP
C26 C27 C28 C29 C30 C31 C32 C36 C35 C37
SC1U10V2KX-1GP
R30 100R2F-L1-GP-U
R31 0R2J-2-GP
R32 0R2J-2-GP
R33 100R2F-L1-GP-U
79 VCCGFX_SENSE_I
79 VSSGFX_SENSE_I
VCC1R8B
R34 0R0306-PAD-GP
C33 C34 SC1U10V2KX-1GP
DY C103 DY C154 SC2D2U6D3V2MX-GP
VCCSA
C834 C835 C836 C837 C838 SC1U10V2KX-1GP
R90 0R0306-PAD-GP
C846 SC1U10V2KX-1GP

NEED SC2D2U4V2MX-1GP

Place near CPU

As for placement, please follow
"Huron River Platform Power Delivery Design Guide Rev1.0"
(Intel DocNo.439028)

Place under CPU

As for placement, please follow
"Huron River Platform Power Delivery Design Guide Rev1.0"
(Intel DocNo.439028)

	VCCSA_SEL0	VCCSA_SEL1	VCCSA
Sandy Bridge	LOW	0 1	0.90V 0.80V
Ivy Bridge	High	0 1	0.725V 0.675V

<Core Design>

緯創資通 **Wistron Corporation**
21F, 88, Sec.1, Hsin Tai Wu Rd., Hsichih,
Taipei Hsien 221, Taiwan, R.O.C.

Title: CPU(6/8):Graphics Power

Size: A3 | Document Number: Dasher-2 | Rev: -1

Date: Friday, March 09, 2012 | Sheet 8 of 101

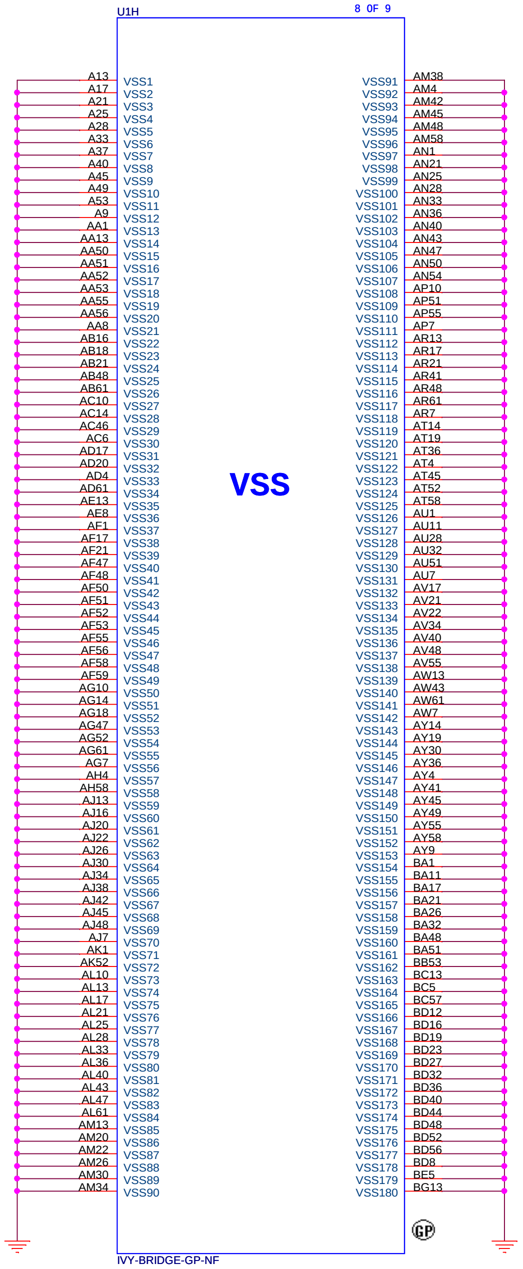
U1H
8 0F 9
VSS
VSS1 A13
VSS2 A17
VSS3 A21
VSS4 A25
VSS5 A28
VSS6 A33
VSS7 A37
VSS8 A40
VSS9 A45
VSS10 A49
VSS11 A53
VSS12 A9
VSS13 AA1
VSS14 AA13
VSS15 AA50
VSS16 AA51
VSS17 AA52
VSS18 AA53
VSS19 AA55
VSS20 AA56
VSS21 AA8
VSS22 AB16
VSS23 AB18
VSS24 AB21
VSS25 AB48
VSS26 AB61
VSS27 AC10
VSS28 AC14
VSS29 AC46
VSS30 AC6
VSS31 AD17
VSS32 AD20
VSS33 AD4
VSS34 AD61
VSS35 AE13
VSS36 AE8
VSS37 AF1
VSS38 AF17
VSS39 AF21
VSS40 AF47
VSS41 AF48
VSS42 AF50
VSS43 AF51
VSS44 AF52
VSS45 AF53
VSS46 AF55
VSS47 AF56
VSS48 AF58
VSS49 AF59
VSS50 AG10
VSS51 AG14
VSS52 AG18
VSS53 AG47
VSS54 AG52
VSS55 AG61
VSS56 AG7
VSS57 AH4
VSS58 AH58
VSS59 AJ13
VSS60 AJ16
VSS61 AJ20
VSS62 AJ22
VSS63 AJ26
VSS64 AJ30
VSS65 AJ34
VSS66 AJ38
VSS67 AJ42
VSS68 AJ45
VSS69 AJ48
VSS70 AJ7
VSS71 AK1
VSS72 AK52
VSS73 AL10
VSS74 AL13
VSS75 AL17
VSS76 AL21
VSS77 AL25
VSS78 AL28
VSS79 AL33
VSS80 AL36
VSS81 AL40
VSS82 AL43
VSS83 AL47
VSS84 AL61
VSS85 AM13
VSS86 AM20
VSS87 AM22
VSS88 AM26
VSS89 AM30
VSS90 AM34
VSS91 AM38
VSS92 AM4
VSS93 AM42
VSS94 AM45
VSS95 AM48
VSS96 AM58
VSS97 AN1
VSS98 AN21
VSS99 AN25
VSS100 AN28
VSS101 AN33
VSS102 AN36
VSS103 AN40
VSS104 AN43
VSS105 AN47
VSS106 AN50
VSS107 AN54
VSS108 AP10
VSS109 AP51
VSS110 AP55
VSS111 AP7
VSS112 AR13
VSS113 AR17
VSS114 AR21
VSS115 AR41
VSS116 AR48
VSS117 AR61
VSS118 AR7
VSS119 AT14
VSS120 AT19
VSS121 AT36
VSS122 AT4
VSS123 AT45
VSS124 AT52
VSS125 AT58
VSS126 AU1
VSS127 AU11
VSS128 AU28
VSS129 AU32
VSS130 AU51
VSS131 AU7
VSS132 AV17
VSS133 AV21
VSS134 AV22
VSS135 AV34
VSS136 AV40
VSS137 AV48
VSS138 AV55
VSS139 AW13
VSS140 AW43
VSS141 AW61
VSS142 AW7
VSS143 AY14
VSS144 AY19
VSS145 AY30
VSS146 AY36
VSS147 AY4
VSS148 AY41
VSS149 AY45
VSS150 AY49
VSS151 AY55
VSS152 AY58
VSS153 AY9
VSS154 BA1
VSS155 BA11
VSS156 BA17
VSS157 BA21
VSS158 BA26
VSS159 BA32
VSS160 BA48
VSS161 BA51
VSS162 BB53
VSS163 BC13
VSS164 BC5
VSS165 BC57
VSS166 BD12
VSS167 BD16
VSS168 BD19
VSS169 BD23
VSS170 BD27
VSS171 BD32
VSS172 BD36
VSS173 BD40
VSS174 BD44
VSS175 BD48
VSS176 BD52
VSS177 BD56
VSS178 BD8
VSS179 BE5
VSS180 BG13
GP
IVY-BRIDGE-GP-NF

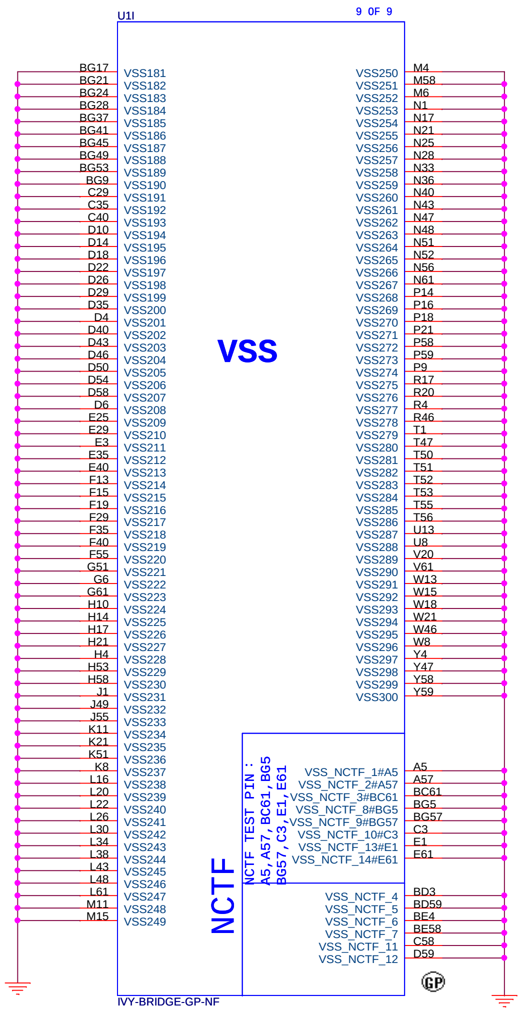
U1I
9 0F 9
VSS
VSS181 BG17
VSS182 BG21
VSS183 BG24
VSS184 BG28
VSS185 BG37
VSS186 BG41
VSS187 BG45
VSS188 BG49
VSS189 BG53
VSS190 BG9
VSS191 C29
VSS192 C35
VSS193 C40
VSS194 D10
VSS195 D14
VSS196 D18
VSS197 D22
VSS198 D26
VSS199 D29
VSS200 D35
VSS201 D4
VSS202 D40
VSS203 D43
VSS204 D46
VSS205 D50
VSS206 D54
VSS207 D58
VSS208 D6
VSS209 E25
VSS210 E29
VSS211 E3
VSS212 E35
VSS213 E40
VSS214 F13
VSS215 F15
VSS216 F19
VSS217 F29
VSS218 F35
VSS219 F40
VSS220 F55
VSS221 G51
VSS222 G6
VSS223 G61
VSS224 H10
VSS225 H14
VSS226 H17
VSS227 H21
VSS228 H4
VSS229 H53
VSS230 H58
VSS231 J1
VSS232 J49
VSS233 J55
VSS234 K11
VSS235 K21
VSS236 K51
VSS237 K8
VSS238 L16
VSS239 L20
VSS240 L22
VSS241 L26
VSS242 L30
VSS243 L34
VSS244 L38
VSS245 L43
VSS246 L48
VSS247 L61
VSS248 M11
VSS249 M15
VSS250 M4
VSS251 M58
VSS252 M6
VSS253 N1
VSS254 N17
VSS255 N21
VSS256 N25
VSS257 N28
VSS258 N33
VSS259 N36
VSS260 N40
VSS261 N43
VSS262 N47
VSS263 N48
VSS264 N51
VSS265 N52
VSS266 N56
VSS267 N61
VSS268 P14
VSS269 P16
VSS270 P18
VSS271 P21
VSS272 P58
VSS273 P59
VSS274 P9
VSS275 R17
VSS276 R20
VSS277 R4
VSS278 R46
VSS279 T1
VSS280 T47
VSS281 T50
VSS282 T51
VSS283 T52
VSS284 T53
VSS285 T55
VSS286 T56
VSS287 U13
VSS288 U8
VSS289 V20
VSS290 V61
VSS291 W13
VSS292 W15
VSS293 W18
VSS294 W21
VSS295 W46
VSS296 W8
VSS297 Y4
VSS298 Y47
VSS299 Y58
VSS300 Y59
NCTF
NCTF TEST PIN :
A5,A57,BC61,BG5
BG57,C3,E1,E61
VSS_NCTF_1#A5 A5
VSS_NCTF_2#A57 A57
VSS_NCTF_3#BC61 BC61
VSS_NCTF_8#BG5 BG5
VSS_NCTF_9#BG57 BG57
VSS_NCTF_10#C3 C3
VSS_NCTF_13#E1 E1
VSS_NCTF_14#E61 E61
VSS_NCTF_4 BD3
VSS_NCTF_5 BD59
VSS_NCTF_6 BE4
VSS_NCTF_7 BE58
VSS_NCTF_11 C58
VSS_NCTF_12 D59
GP
IVY-BRIDGE-GP-NF

<Core Design>

緯創資通 **Wistron Corporation**
21F, 88, Sec.1, Hsin Tai Wu Rd., Hsichih,
Taipei Hsien 221, Taiwan, R.O.C.

Title	**CPU(7/8):GND**	
Size Custom	Document Number **Dasher-2**	Rev -1
Date: Tuesday, February 21, 2012	Sheet 9 of 101	

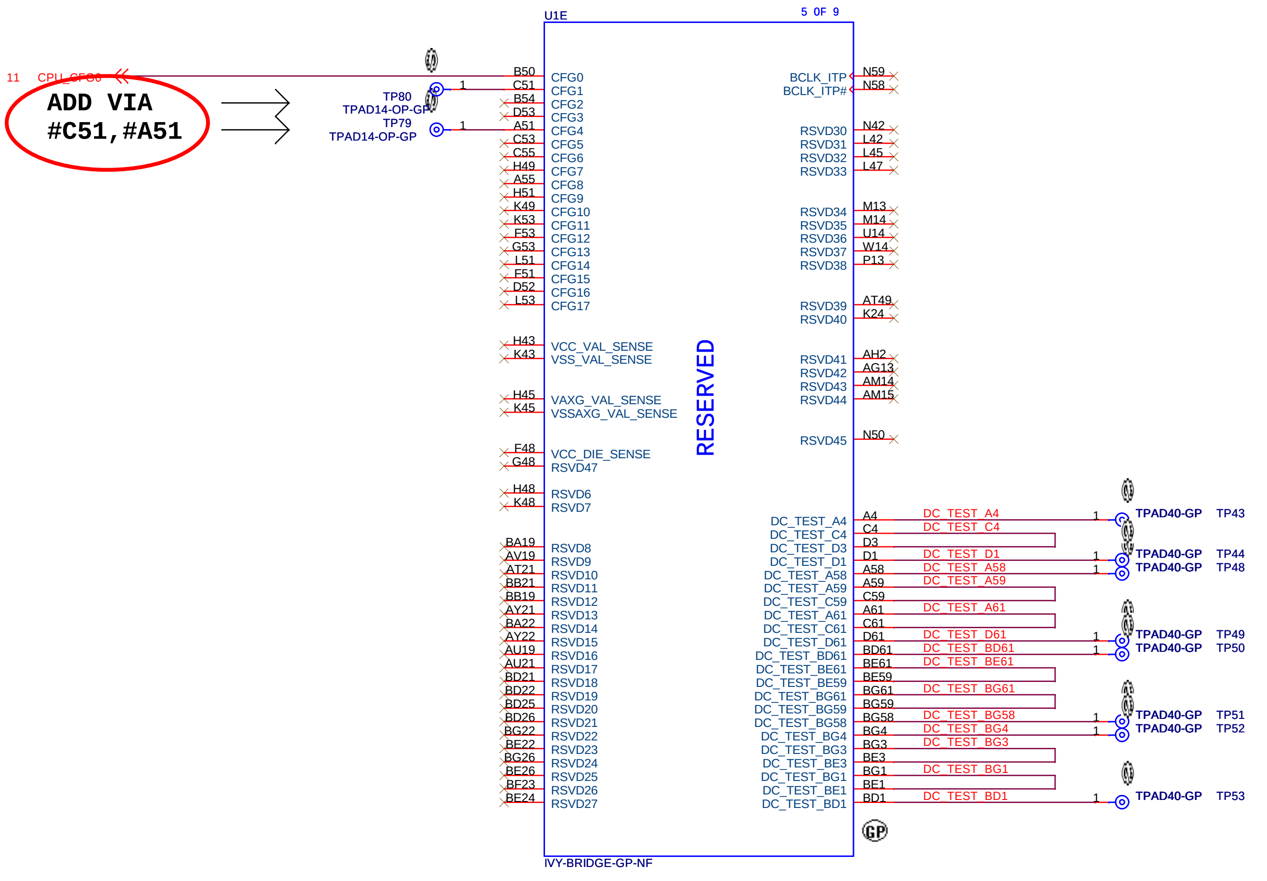
U1E
5 OF 9
RESERVED
IVY-BRIDGE-GP-NF
11 CPU_CFG0
ADD VIA
#C51,#A51
TP80
TPAD14-OP-GP
TP79
TPAD14-OP-GP
1
B50 CFG0
C51 CFG1
B54 CFG2
D53 CFG3
A51 CFG4
C53 CFG5
C55 CFG6
H49 CFG7
A55 CFG8
H51 CFG9
K49 CFG10
K53 CFG11
F53 CFG12
G53 CFG13
L51 CFG14
F51 CFG15
D52 CFG16
L53 CFG17
H43 VCC_VAL_SENSE
K43 VSS_VAL_SENSE
H45 VAXG_VAL_SENSE
K45 VSSAXG_VAL_SENSE
F48 VCC_DIE_SENSE
G48 RSVD47
H48 RSVD6
K48 RSVD7
BA19 RSVD8
AV19 RSVD9
AT21 RSVD10
BB21 RSVD11
BB19 RSVD12
AY21 RSVD13
BA22 RSVD14
AY22 RSVD15
AU19 RSVD16
AU21 RSVD17
BD21 RSVD18
BD22 RSVD19
BD25 RSVD20
BD26 RSVD21
BG22 RSVD22
BE22 RSVD23
BG26 RSVD24
BE26 RSVD25
BF23 RSVD26
BE24 RSVD27
BCLK_ITP N59
BCLK_ITP# N58
RSVD30 N42
RSVD31 L42
RSVD32 L45
RSVD33 L47
RSVD34 M13
RSVD35 M14
RSVD36 U14
RSVD37 W14
RSVD38 P13
RSVD39 AT49
RSVD40 K24
RSVD41 AH2
RSVD42 AG13
RSVD43 AM14
RSVD44 AM15
RSVD45 N50
DC_TEST_A4 A4
DC_TEST_C4 C4
DC_TEST_D3 D3
DC_TEST_D1 D1
DC_TEST_A58 A58
DC_TEST_A59 A59
DC_TEST_C59 C59
DC_TEST_A61 A61
DC_TEST_C61 C61
DC_TEST_D61 D61
DC_TEST_BD61 BD61
DC_TEST_BE61 BE61
DC_TEST_BE59 BE59
DC_TEST_BG61 BG61
DC_TEST_BG59 BG59
DC_TEST_BG58 BG58
DC_TEST_BG4 BG4
DC_TEST_BG3 BG3
DC_TEST_BE3 BE3
DC_TEST_BG1 BG1
DC_TEST_BE1 BE1
DC_TEST_BD1 BD1
TPAD40-GP TP43
TPAD40-GP TP44
TPAD40-GP TP48
TPAD40-GP TP49
TPAD40-GP TP50
TPAD40-GP TP51
TPAD40-GP TP52
TPAD40-GP TP53
GP

<Core Design>

緯創資通 **Wistron Corporation**
21F, 88, Sec.1, Hsin Tai Wu Rd., Hsichih,
Taipei Hsien 221, Taiwan, R.O.C.

Title **CPU(8/8):CFG/Reserved**		
Size A3	Document Number **Dasher-2**	Rev **-1**
Date: Friday, March 09, 2012	Sheet 10 of 101	

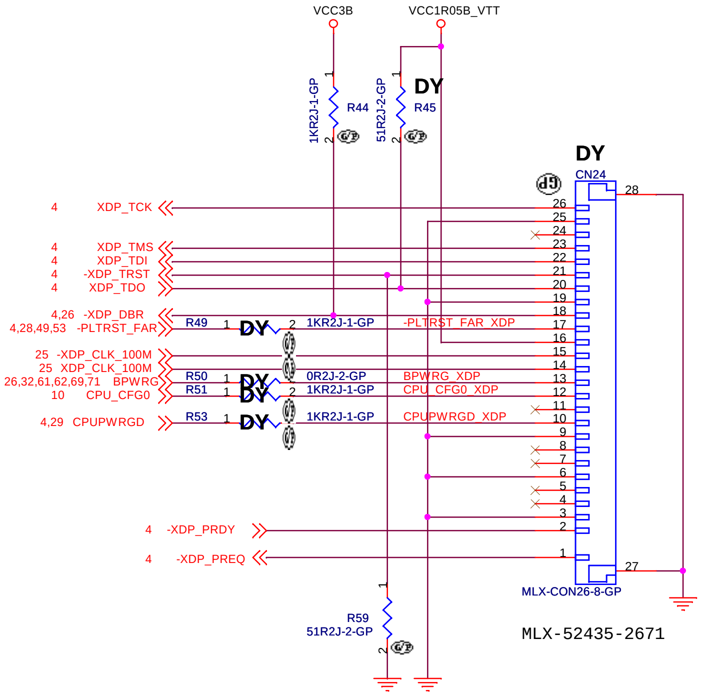
VCC3B
VCC1R05B_VTT
1KR2J-1-GP
R44
51R2J-2-GP
R45
DY
CN24
4 XDP_TCK
4 XDP_TMS
4 XDP_TDI
4 -XDP_TRST
4 XDP_TDO
4,26 -XDP_DBR
4,28,49,53 -PLTRST_FAR
25 -XDP_CLK_100M
25 XDP_CLK_100M
26,32,61,62,69,71 BPWRG
10 CPU_CFG0
4,29 CPUPWRGD
R49
R50
R51
R53
1KR2J-1-GP
0R2J-2-GP
-PLTRST_FAR_XDP
BPWRG_XDP
CPU_CFG0_XDP
CPUPWRGD_XDP
4 -XDP_PRDY
4 -XDP_PREQ
R59
51R2J-2-GP
MLX-CON26-8-GP
MLX-52435-2671

DEBUG Interface for Processor.

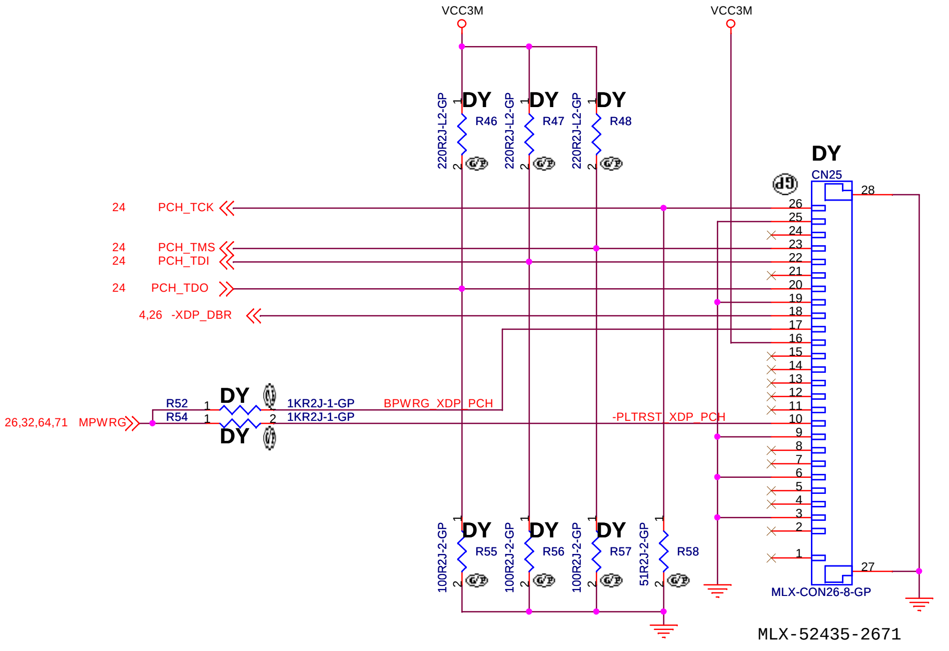
VCC3M
VCC3M
220R2J-L2-GP
R46
R47
R48
DY
CN25
24 PCH_TCK
24 PCH_TMS
24 PCH_TDI
24 PCH_TDO
4,26 -XDP_DBR
26,32,64,71 MPWRG
R52
R54
1KR2J-1-GP
BPWRG_XDP_PCH
-PLTRST_XDP_PCH
100R2J-2-GP
51R2J-2-GP
R55
R56
R57
R58
MLX-CON26-8-GP
MLX-52435-2671

DEBUG Interface for PCH.

XDP1 NOTE:"ASM" FOR PDV/SDV ONLY

		ENABLE	DISABLE
TDO	R45	ASM	DY
TRST#	R59	ASM	ASM
DBRST#	R44	ASM	ASM
RESET#	R49	ASM	DY
CFG0	R51	ASM	DY
PWRGD	R53	ASM	DY
BPWRG	R50	ASM	DY
	CN24	ASM	DY

FVT Logic

XDP2 NOTE:"ASM" FOR PDV/SDV ONLY

		ENABLE	DISABLE
TDO	R46	220	DY
	R55	100	DY
TMS	R48	220	DY
	R57	100	DY
TDI	R47	220	DY
	R56	100	DY
TCK	R58	51	51
MPWRG	R52	ASM	DY
	R54	ASM	DY
	CN25	ASM	DY

FVT Logic

<Core Design>

緯創資通 **Wistron Corporation**
21F, 88, Sec.1, Hsin Tai Wu Rd., Hsichih,
Taipei Hsien 221, Taiwan, R.O.C.

Title
XDP Connector

Size A3
Document Number **Dasher-2**
Rev -1

Date: Friday, March 09, 2012
Sheet 11 of 101

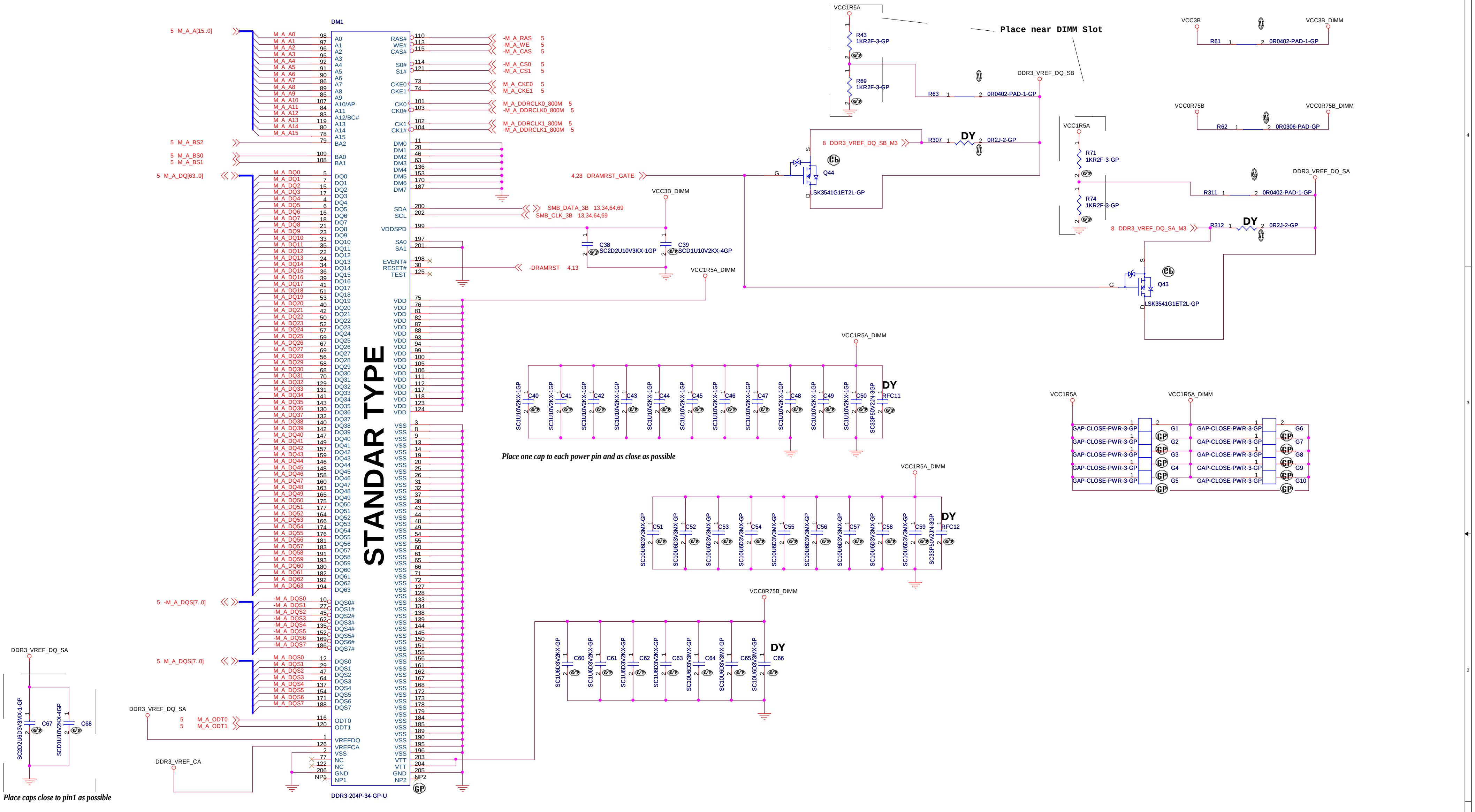
Place near DIMM Slot
DM1
STANDAR TYPE
DDR3-204P-34-GP-U
5 M_A_A[15..0]
M_A_A0 … M_A_A15
A0 A1 A2 A3 A4 A5 A6 A7 A8 A9 A10/AP A11 A12/BC# A13 A14 A15
5 M_A_BS2
BA2
5 M_A_BS0
5 M_A_BS1
BA0
BA1
5 M_A_DQ[63..0]
M_A_DQ0 … M_A_DQ63
DQ0 … DQ63
5 -M_A_DQS[7..0]
-M_A_DQS0 … -M_A_DQS7
DQS0# … DQS7#
5 M_A_DQS[7..0]
M_A_DQS0 … M_A_DQS7
DQS0 … DQS7
5 M_A_ODT0
5 M_A_ODT1
ODT0
ODT1
VREFDQ
VREFCA
VSS
NC
NC
GND
NP1
RAS#
WE#
CAS#
S0#
S1#
CKE0
CKE1
CK0
CK0#
CK1
CK1#
-M_A_RAS 5
-M_A_WE 5
-M_A_CAS 5
-M_A_CS0 5
-M_A_CS1 5
M_A_CKE0 5
M_A_CKE1 5
M_A_DDRCLK0_800M 5
-M_A_DDRCLK0_800M 5
M_A_DDRCLK1_800M 5
-M_A_DDRCLK1_800M 5
DM0 DM1 DM2 DM3 DM4 DM5 DM6 DM7
SDA
SCL
SMB_DATA_3B 13,34,64,69
SMB_CLK_3B 13,34,64,69
VDDSPD
SA0
SA1
EVENT#
RESET#
TEST
-DRAMRST 4,13
VDD
VSS
VTT
GND
NP2
VCC3B_DIMM
C38 SC2D2U10V3KX-1GP
C39 SCD1U10V2KX-4GP
VCC1R5A_DIMM
VCC1R5A
R43 1KR2F-3-GP
R69 1KR2F-3-GP
R63 0R0402-PAD-1-GP
DDR3_VREF_DQ_SB
8 DDR3_VREF_DQ_SB_M3
R307 0R2J-2-GP
DY
Q44
LSK3541G1ET2L-GP
4,28 DRAMRST_GATE
VCC3B
VCC3B_DIMM
R61 0R0402-PAD-1-GP
VCC0R75B
VCC0R75B_DIMM
R62 0R0306-PAD-GP
VCC1R5A
R71 1KR2F-3-GP
R74 1KR2F-3-GP
DDR3_VREF_DQ_SA
R311 0R0402-PAD-1-GP
8 DDR3_VREF_DQ_SA_M3
R312 0R2J-2-GP
DY
Q43
LSK3541G1ET2L-GP
VCC1R5A_DIMM
C40 C41 C42 C43 C44 C45 C46 C47 C48 C49 C50
SC1U10V2KX-1GP
RFC11 SC33P50V2JN-3GP
DY
Place one cap to each power pin and as close as possible
VCC1R5A_DIMM
C51 C52 C53 C54 C55 C56 C57 C58 C59
SC10U6D3V3MX-GP
RFC12 SC33P50V2JN-3GP
DY
VCC0R75B_DIMM
C60 C61 C62 C63 C64 C65 C66
SC1U6D3V2KX-GP
SC10U6D3V3MX-GP
DY
VCC1R5A
VCC1R5A_DIMM
G1 G2 G3 G4 G5 G6 G7 G8 G9 G10
GAP-CLOSE-PWR-3-GP
DDR3_VREF_DQ_SA
C67 SC2D2U6D3V3MX-1-GP
C68 SCD1U10V2KX-4GP
Place caps close to pin1 as possible
DDR3_VREF_DQ_SA
DDR3_VREF_CA

<Core Design>

緯創資通 Wistron Corporation
21F, 88, Sec.1, Hsin Tai Wu Rd., Hsichih,
Taipei Hsien 221, Taiwan, R.O.C.

Title
DDR3 SODIMM-A

Size	Document Number	Rev
A2	Dasher-2	-1

Date: Friday, March 09, 2012 Sheet 12 of 101

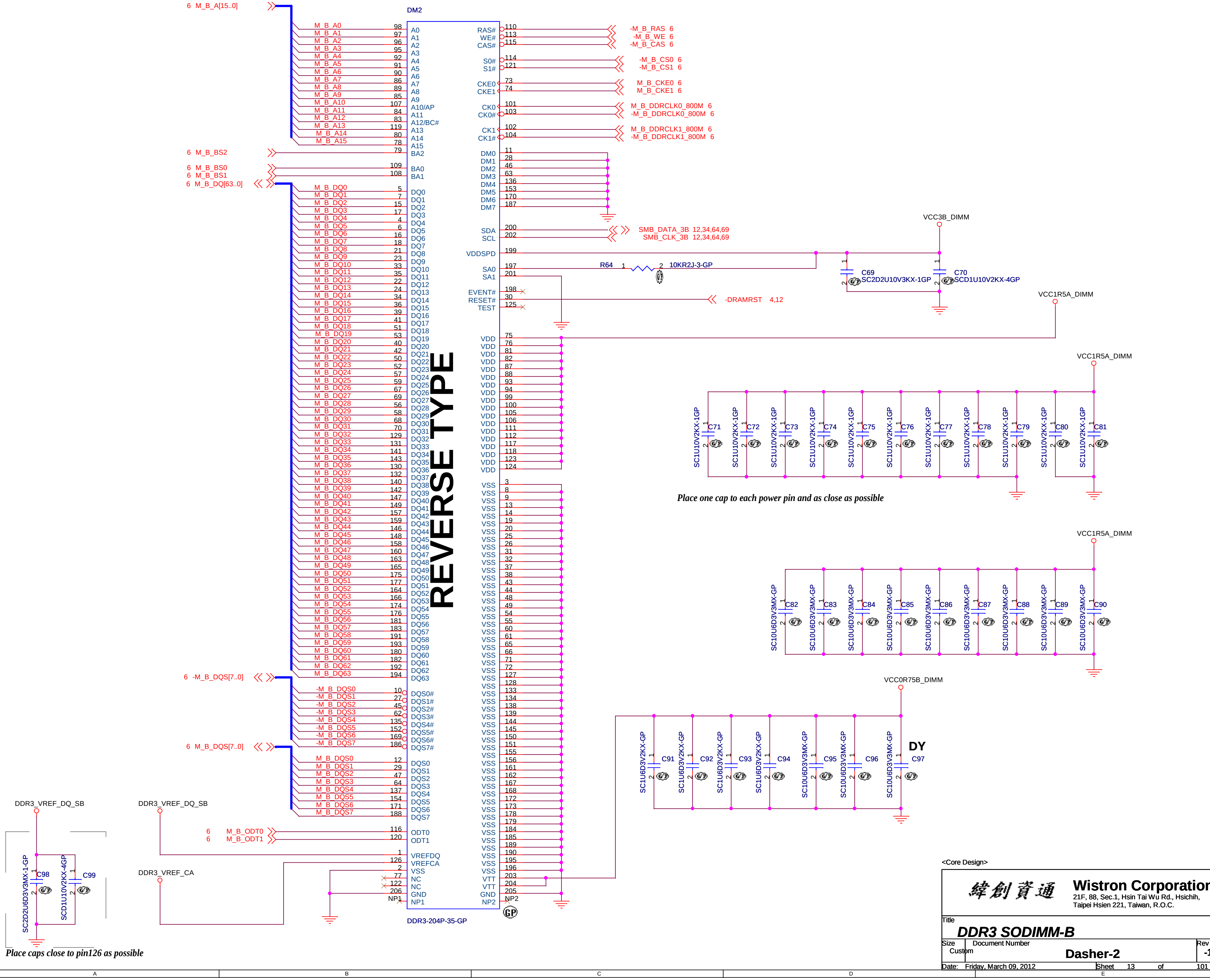
DM2
REVERSE TYPE
DDR3-204P-35-GP
6 M_B_A[15..0]
M_B_A0 98 A0
M_B_A1 97 A1
M_B_A2 96 A2
M_B_A3 95 A3
M_B_A4 92 A4
M_B_A5 91 A5
M_B_A6 90 A6
M_B_A7 86 A7
M_B_A8 89 A8
M_B_A9 85 A9
M_B_A10 107 A10/AP
M_B_A11 84 A11
M_B_A12 83 A12/BC#
M_B_A13 119 A13
M_B_A14 80 A14
M_B_A15 78 A15
6 M_B_BS2 79 BA2
6 M_B_BS0 109 BA0
6 M_B_BS1 108 BA1
6 M_B_DQ[63..0]
M_B_DQ0 5 DQ0
M_B_DQ1 7 DQ1
M_B_DQ2 15 DQ2
M_B_DQ3 17 DQ3
M_B_DQ4 4 DQ4
M_B_DQ5 6 DQ5
M_B_DQ6 16 DQ6
M_B_DQ7 18 DQ7
M_B_DQ8 21 DQ8
M_B_DQ9 23 DQ9
M_B_DQ10 33 DQ10
M_B_DQ11 35 DQ11
M_B_DQ12 22 DQ12
M_B_DQ13 24 DQ13
M_B_DQ14 34 DQ14
M_B_DQ15 36 DQ15
M_B_DQ16 39 DQ16
M_B_DQ17 41 DQ17
M_B_DQ18 51 DQ18
M_B_DQ19 53 DQ19
M_B_DQ20 40 DQ20
M_B_DQ21 42 DQ21
M_B_DQ22 50 DQ22
M_B_DQ23 52 DQ23
M_B_DQ24 57 DQ24
M_B_DQ25 59 DQ25
M_B_DQ26 67 DQ26
M_B_DQ27 69 DQ27
M_B_DQ28 56 DQ28
M_B_DQ29 58 DQ29
M_B_DQ30 68 DQ30
M_B_DQ31 70 DQ31
M_B_DQ32 129 DQ32
M_B_DQ33 131 DQ33
M_B_DQ34 141 DQ34
M_B_DQ35 143 DQ35
M_B_DQ36 130 DQ36
M_B_DQ37 132 DQ37
M_B_DQ38 140 DQ38
M_B_DQ39 142 DQ39
M_B_DQ40 147 DQ40
M_B_DQ41 149 DQ41
M_B_DQ42 157 DQ42
M_B_DQ43 159 DQ43
M_B_DQ44 146 DQ44
M_B_DQ45 148 DQ45
M_B_DQ46 158 DQ46
M_B_DQ47 160 DQ47
M_B_DQ48 163 DQ48
M_B_DQ49 165 DQ49
M_B_DQ50 175 DQ50
M_B_DQ51 177 DQ51
M_B_DQ52 164 DQ52
M_B_DQ53 166 DQ53
M_B_DQ54 174 DQ54
M_B_DQ55 176 DQ55
M_B_DQ56 181 DQ56
M_B_DQ57 183 DQ57
M_B_DQ58 191 DQ58
M_B_DQ59 193 DQ59
M_B_DQ60 180 DQ60
M_B_DQ61 182 DQ61
M_B_DQ62 192 DQ62
M_B_DQ63 194 DQ63
6 -M_B_DQS[7..0]
-M_B_DQS0 10 DQS0#
-M_B_DQS1 27 DQS1#
-M_B_DQS2 45 DQS2#
-M_B_DQS3 62 DQS3#
-M_B_DQS4 135 DQS4#
-M_B_DQS5 152 DQS5#
-M_B_DQS6 169 DQS6#
-M_B_DQS7 186 DQS7#
6 M_B_DQS[7..0]
M_B_DQS0 12 DQS0
M_B_DQS1 29 DQS1
M_B_DQS2 47 DQS2
M_B_DQS3 64 DQS3
M_B_DQS4 137 DQS4
M_B_DQS5 154 DQS5
M_B_DQS6 171 DQS6
M_B_DQS7 188 DQS7
6 M_B_ODT0 116 ODT0
6 M_B_ODT1 120 ODT1
1 VREFDQ
126 VREFCA
2 VSS
77 NC
122 NC
206 GND
NP1 NP1
RAS# 110 -M_B_RAS 6
WE# 113 -M_B_WE 6
CAS# 115 -M_B_CAS 6
S0# 114 -M_B_CS0 6
S1# 121 -M_B_CS1 6
CKE0 73 M_B_CKE0 6
CKE1 74 M_B_CKE1 6
CK0 101 M_B_DDRCLK0_800M 6
CK0# 103 -M_B_DDRCLK0_800M 6
CK1 102 M_B_DDRCLK1_800M 6
CK1# 104 -M_B_DDRCLK1_800M 6
DM0 11
DM1 28
DM2 46
DM3 63
DM4 136
DM5 153
DM6 170
DM7 187
SDA 200 SMB_DATA_3B 12,34,64,69
SCL 202 SMB_CLK_3B 12,34,64,69
VDDSPD 199
SA0 197
SA1 201
EVENT# 198
RESET# 30 -DRAMRST 4,12
TEST 125
R64 1 2 10KR2J-3-GP
VCC3B_DIMM
C69 SC2D2U10V3KX-1GP
C70 SCD1U10V2KX-4GP
VDD 75 76 81 82 87 88 93 94 99 100 105 106 111 112 117 118 123 124
VSS 3 8 9 13 14 19 20 25 26 31 32 37 38 43 44 48 49 54 55 60 61 65 66 71 72 127 128 133 134 138 139 144 145 150 151 155 156 161 162 167 168 172 173 178 179 184 185 189 190 195 196
VTT 203
VTT 204
GND 205
NP2 NP2
VCC1R5A_DIMM
VCC1R5A_DIMM
C71 C72 C73 C74 C75 C76 C77 C78 C79 C80 C81 SC1U10V2KX-1GP
VCC1R5A_DIMM
C82 C83 C84 C85 C86 C87 C88 C89 C90 SC10U6D3V3MX-GP
VCC0R75B_DIMM
C91 C92 C93 C94 SC1U6D3V2KX-GP
C95 C96 C97 SC10U6D3V3MX-GP
DY
DDR3_VREF_DQ_SB
DDR3_VREF_DQ_SB
DDR3_VREF_CA
C98 SC2D2U6D3V3MX-1-GP
C99 SCD1U10V2KX-4GP

Place one cap to each power pin and as close as possible

Place caps close to pin126 as possible

<Core Design>

緯創資通 **Wistron Corporation**
21F, 88, Sec.1, Hsin Tai Wu Rd., Hsichih,
Taipei Hsien 221, Taiwan, R.O.C.

Title
DDR3 SODIMM-B

Size Custom | Document Number **Dasher-2** | Rev **-1**

Date: Friday, March 09, 2012 | Sheet 13 of 101

B
L
A
N
K

B
L
A
N
K

<Core Design>

緯創資通 **Wistron Corporation**
21F, 88, Sec.1, Hsin Tai Wu Rd., Hsichih,
Taipei Hsien 221, Taiwan, R.O.C.

Title ***BLANK***		
Size A3	Document Number **Dasher-2**	Rev **-1**
Date: Tuesday, February 21, 2012	Sheet 15 of 101	

B
L
A
N
K

B
L
A
N
K

<Core Design>

緯創資通 **Wistron Corporation**
21F, 88, Sec.1, Hsin Tai Wu Rd., Hsichih,
Taipei Hsien 221, Taiwan, R.O.C.

Title ***BLANK***		
Size A3	Document Number **Dasher-2**	Rev **-1**
Date: Tuesday, February 21, 2012	Sheet 17 of 101	

B
L
A
N
K

<Core Design>

緯創資通 **Wistron Corporation**
21F, 88, Sec.1, Hsin Tai Wu Rd., Hsichih,
Taipei Hsien 221, Taiwan, R.O.C.

Title
BLANK

Size	Document Number	Rev
A3	**Dasher-2**	**-1**

Date: Tuesday, February 21, 2012 Sheet 18 of 101

B
L
A
N
K

B
L
A
N
K

<Core Design>

緯創資通 **Wistron Corporation**

21F, 88, Sec.1, Hsin Tai Wu Rd., Hsichih,
Taipei Hsien 221, Taiwan, R.O.C.

Title		
BLANK		
Size: A3	Document Number: **Dasher-2**	Rev: **-1**
Date: Tuesday, February 21, 2012	Sheet 20 of 101	

B
L
A
N
K

<Core Design>

緯創資通 **Wistron Corporation**
21F, 88, Sec.1, Hsin Tai Wu Rd., Hsichih,
Taipei Hsien 221, Taiwan, R.O.C.

Title
BLANK

Size A3
Document Number **Dasher-2**
Rev **-1**

Date: Tuesday, February 21, 2012
Sheet 21 of 101

B
L
A
N
K

BLANK

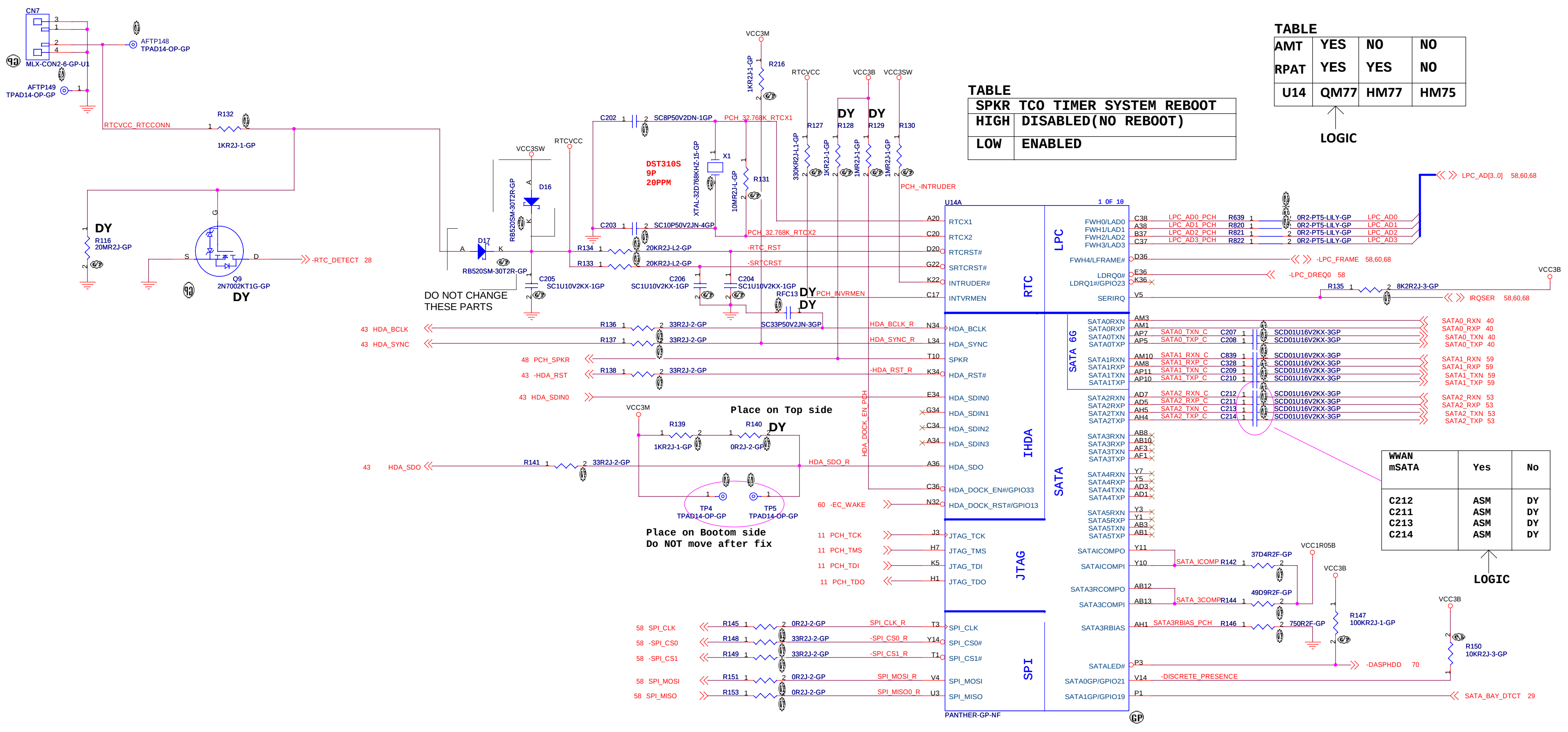
CN7
MLX-CON2-6-GP-U1
AFTP148
TPAD14-OP-GP
AFTP149
TPAD14-OP-GP
RTCVCC_RTCCONN
R132
1KR2J-1-GP
DY
R116
20MR2J-GP
Q9
2N7002KT1G-GP
DY
-RTC_DETECT 28
DO NOT CHANGE
THESE PARTS
VCC3SW
RTCVCC
D16
RB520SM-30T2R-GP
D17
RB520SM-30T2R-GP
C202
SC8P50V2DN-1GP
C203
SC10P50V2JN-4GP
PCH_32.768K_RTCX1
PCH_32.768K_RTCX2
DST310S
9P
20PPM
X1
XTAL-32D768KHZ-15-GP
R131
10MR2J-L-GP
R134
20KR2J-L2-GP
R133
20KR2J-L2-GP
-RTC_RST
-SRTCRST
C205
SC1U10V2KX-1GP
C206
SC1U10V2KX-1GP
C204
SC1U10V2KX-1GP
RFC13
DY
DY
PCH_INVRMEN
SC33P50V2JN-3GP
VCC3M
R216
1KR2J-1-GP
RTCVCC
VCC3B
VCC3SW
R127
330KR2J-L1-GP
DY
R128
1KR2J-1-GP
DY
R129
1MR2J-1-GP
R130
1MR2J-1-GP
PCH_-INTRUDER
U14A
1 OF 10
RTCX1
RTCX2
RTCRST#
SRTCRST#
INTRUDER#
INTVRMEN
RTC
LPC
FWH0/LAD0
FWH1/LAD1
FWH2/LAD2
FWH3/LAD3
FWH4/LFRAME#
LDRQ0#
LDRQ1#/GPIO23
SERIRQ
LPC_AD0_PCH
LPC_AD1_PCH
LPC_AD2_PCH
LPC_AD3_PCH
R639
R820
R821
R822
0R2-PT5-LILY-GP
LPC_AD0
LPC_AD1
LPC_AD2
LPC_AD3
LPC_AD[3..0] 58,60,68
-LPC_FRAME 58,60,68
-LPC_DREQ0 58
R135
8K2R2J-3-GP
VCC3B
IRQSER 58,60,68
43 HDA_BCLK
43 HDA_SYNC
48 PCH_SPKR
43 -HDA_RST
43 HDA_SDIN0
R136
R137
R138
33R2J-2-GP
HDA_BCLK_R
HDA_SYNC_R
-HDA_RST_R
HDA_DOCK_EN_PCH
HDA_BCLK
HDA_SYNC
SPKR
HDA_RST#
HDA_SDIN0
HDA_SDIN1
HDA_SDIN2
HDA_SDIN3
HDA_SDO
HDA_DOCK_EN#/GPIO33
HDA_DOCK_RST#/GPIO13
IHDA
VCC3M
Place on Top side
R139
1KR2J-1-GP
R140
0R2J-2-GP
DY
43 HDA_SDO
R141
33R2J-2-GP
HDA_SDO_R
TP4
TPAD14-OP-GP
TP5
TPAD14-OP-GP
Place on Bootom side
Do NOT move after fix
60 -EC_WAKE
11 PCH_TCK
11 PCH_TMS
11 PCH_TDI
11 PCH_TDO
JTAG_TCK
JTAG_TMS
JTAG_TDI
JTAG_TDO
JTAG
58 SPI_CLK
58 -SPI_CS0
58 -SPI_CS1
58 SPI_MOSI
58 SPI_MISO
R145
R148
R149
R151
R153
0R2J-2-GP
33R2J-2-GP
SPI_CLK_R
-SPI_CS0_R
-SPI_CS1_R
SPI_MOSI_R
SPI_MISO_R
SPI_CLK
SPI_CS0#
SPI_CS1#
SPI_MOSI
SPI_MISO
SPI
PANTHER-GP-NF
SATA 6G
SATA
SATA0RXN
SATA0RXP
SATA0TXN
SATA0TXP
SATA1RXN
SATA1RXP
SATA1TXN
SATA1TXP
SATA2RXN
SATA2RXP
SATA2TXN
SATA2TXP
SATA3RXN
SATA3RXP
SATA3TXN
SATA3TXP
SATA4RXN
SATA4RXP
SATA4TXN
SATA4TXP
SATA5RXN
SATA5RXP
SATA5TXN
SATA5TXP
SATAICOMPO
SATAICOMPI
SATA3RCOMPO
SATA3COMPI
SATA3RBIAS
SATALED#
SATA0GP/GPIO21
SATA1GP/GPIO19
SATA0_TXN_C
SATA0_TXP_C
SATA1_RXN_C
SATA1_RXP_C
SATA1_TXN_C
SATA1_TXP_C
SATA2_RXN_C
SATA2_RXP_C
SATA2_TXN_C
SATA2_TXP_C
C207
C208
C839
C328
C209
C210
C212
C211
C213
C214
SCD01U16V2KX-3GP
SATA0_RXN 40
SATA0_RXP 40
SATA0_TXN 40
SATA0_TXP 40
SATA1_RXN 59
SATA1_RXP 59
SATA1_TXN 59
SATA1_TXP 59
SATA2_RXN 53
SATA2_RXP 53
SATA2_TXN 53
SATA2_TXP 53
VCC1R05B
SATA_ICOMP
R142
37D4R2F-GP
SATA_3COMP
R144
49D9R2F-GP
SATA3RBIAS_PCH
R146
750R2F-GP
VCC3B
R147
100KR2J-1-GP
-DASPHDD 70
VCC3B
R150
10KR2J-3-GP
-DISCRETE_PRESENCE
SATA_BAY_DTCT 29
LOGIC
LOGIC

TABLE

SPKR	TCO TIMER SYSTEM REBOOT
HIGH	DISABLED(NO REBOOT)
LOW	ENABLED

TABLE

AMT	YES	NO	NO
RPAT	YES	YES	NO
U14	QM77	HM77	HM75

WWAN mSATA	Yes	No
C212	ASM	DY
C211	ASM	DY
C213	ASM	DY
C214	ASM	DY

<Core Design>

緯創資通 **Wistron Corporation**

21F, 88, Sec.1, Hsin Tai Wu Rd., Hsichih,
Taipei Hsien 221, Taiwan, R.O.C.

Title **PCH(1/9):HDA/JTAG/SPI/SATA**

Size A2 Document Number **Dasher-2** Rev -1

Date: Friday, March 09, 2012 Sheet 24 of 101

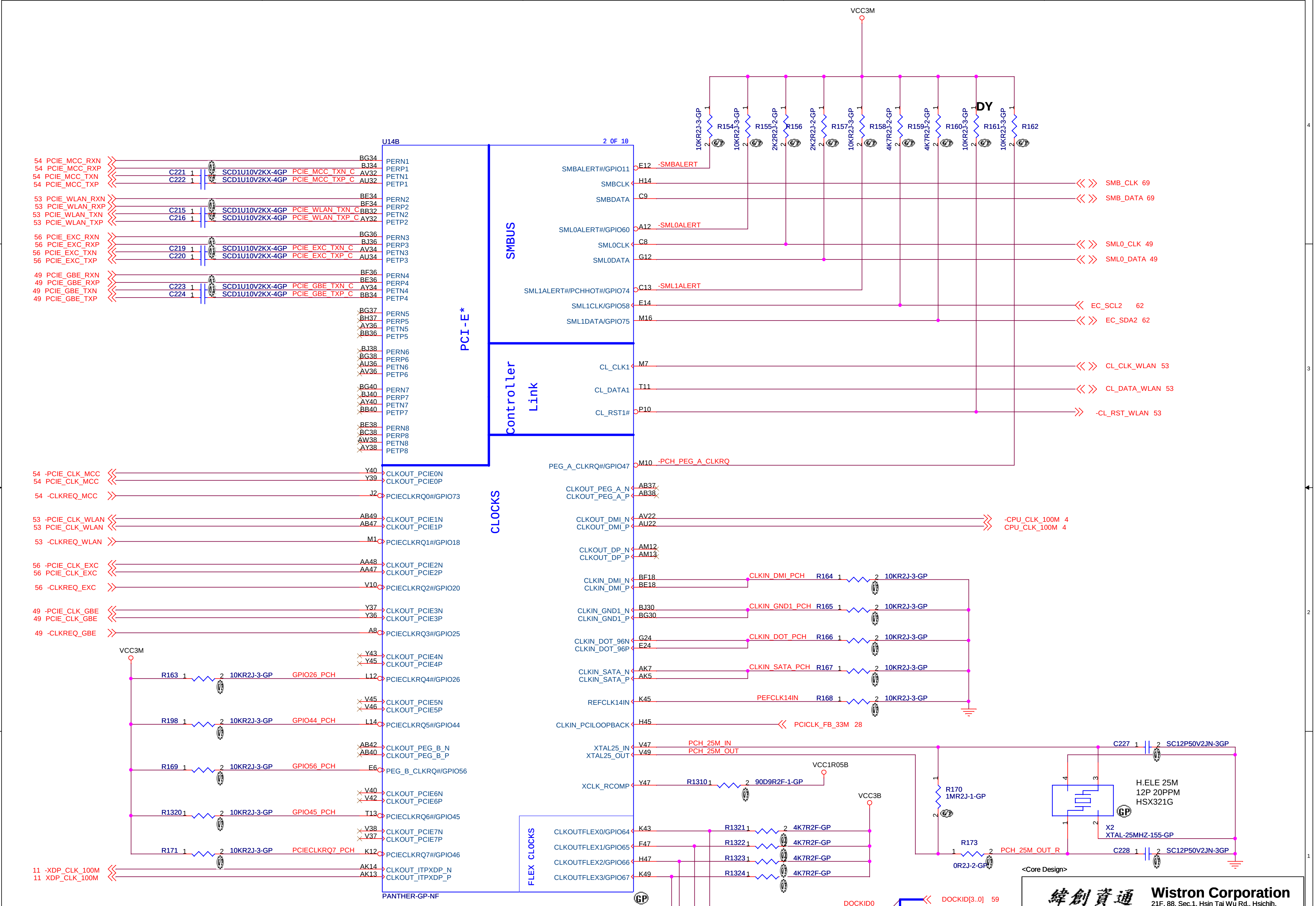
VCC3M
U14B
2 OF 10
PCI-E*
SMBUS
Controller Link
CLOCKS
FLEX CLOCKS
PANTHER-GP-NF
54 PCIE_MCC_RXN
54 PCIE_MCC_RXP
54 PCIE_MCC_TXN
54 PCIE_MCC_TXP
53 PCIE_WLAN_RXN
53 PCIE_WLAN_RXP
53 PCIE_WLAN_TXN
53 PCIE_WLAN_TXP
56 PCIE_EXC_RXN
56 PCIE_EXC_RXP
56 PCIE_EXC_TXN
56 PCIE_EXC_TXP
49 PCIE_GBE_RXN
49 PCIE_GBE_RXP
49 PCIE_GBE_TXN
49 PCIE_GBE_TXP
C221 SCD1U10V2KX-4GP PCIE_MCC_TXN_C
C222 SCD1U10V2KX-4GP PCIE_MCC_TXP_C
C215 SCD1U10V2KX-4GP PCIE_WLAN_TXN_C
C216 SCD1U10V2KX-4GP PCIE_WLAN_TXP_C
C219 SCD1U10V2KX-4GP PCIE_EXC_TXN_C
C220 SCD1U10V2KX-4GP PCIE_EXC_TXP_C
C223 SCD1U10V2KX-4GP PCIE_GBE_TXN_C
C224 SCD1U10V2KX-4GP PCIE_GBE_TXP_C
BG34 PERN1
BJ34 PERP1
AV32 PETN1
AU32 PETP1
BE34 PERN2
BF34 PERP2
BB32 PETN2
AY32 PETP2
BG36 PERN3
BJ36 PERP3
AV34 PETN3
AU34 PETP3
BF36 PERN4
BE36 PERP4
AY34 PETN4
BB34 PETP4
BG37 PERN5
BH37 PERP5
AY36 PETN5
BB36 PETP5
BJ38 PERN6
BG38 PERP6
AU36 PETN6
AV36 PETP6
BG40 PERN7
BJ40 PERP7
AY40 PETN7
BB40 PETP7
BE38 PERN8
BC38 PERP8
AW38 PETN8
AY38 PETP8
54 -PCIE_CLK_MCC
54 PCIE_CLK_MCC
54 -CLKREQ_MCC
53 -PCIE_CLK_WLAN
53 PCIE_CLK_WLAN
53 -CLKREQ_WLAN
56 -PCIE_CLK_EXC
56 PCIE_CLK_EXC
56 -CLKREQ_EXC
49 -PCIE_CLK_GBE
49 PCIE_CLK_GBE
49 -CLKREQ_GBE
Y40 CLKOUT_PCIE0N
Y39 CLKOUT_PCIE0P
J2 PCIECLKRQ0#/GPIO73
AB49 CLKOUT_PCIE1N
AB47 CLKOUT_PCIE1P
M1 PCIECLKRQ1#/GPIO18
AA48 CLKOUT_PCIE2N
AA47 CLKOUT_PCIE2P
V10 PCIECLKRQ2#/GPIO20
Y37 CLKOUT_PCIE3N
Y36 CLKOUT_PCIE3P
A8 PCIECLKRQ3#/GPIO25
Y43 CLKOUT_PCIE4N
Y45 CLKOUT_PCIE4P
L12 PCIECLKRQ4#/GPIO26
V45 CLKOUT_PCIE5N
V46 CLKOUT_PCIE5P
L14 PCIECLKRQ5#/GPIO44
AB42 CLKOUT_PEG_B_N
AB40 CLKOUT_PEG_B_P
E6 PEG_B_CLKRQ#/GPIO56
V40 CLKOUT_PCIE6N
V42 CLKOUT_PCIE6P
T13 PCIECLKRQ6#/GPIO45
V38 CLKOUT_PCIE7N
V37 CLKOUT_PCIE7P
K12 PCIECLKRQ7#/GPIO46
AK14 CLKOUT_ITPXDP_N
AK13 CLKOUT_ITPXDP_P
11 -XDP_CLK_100M
11 XDP_CLK_100M
R163 10KR2J-3-GP GPIO26_PCH
R198 10KR2J-3-GP GPIO44_PCH
R169 10KR2J-3-GP GPIO56_PCH
R1320 10KR2J-3-GP GPIO45_PCH
R171 10KR2J-3-GP PCIECLKRQ7_PCH
10KR2J-3-GP R154
10KR2J-3-GP R155
2K2R2J-2-GP R156
2K2R2J-2-GP R157
10KR2J-3-GP R158
4K7R2J-2-GP R159
4K7R2J-2-GP R160
10KR2J-3-GP R161
10KR2J-3-GP R162
DY
E12 SMBALERT#/GPIO11 -SMBALERT
H14 SMBCLK
C9 SMBDATA
A12 SML0ALERT#/GPIO60 -SML0ALERT
C8 SML0CLK
G12 SML0DATA
C13 SML1ALERT#/PCHHOT#/GPIO74 -SML1ALERT
E14 SML1CLK/GPIO58
M16 SML1DATA/GPIO75
SMB_CLK 69
SMB_DATA 69
SML0_CLK 49
SML0_DATA 49
EC_SCL2 62
EC_SDA2 62
M7 CL_CLK1
T11 CL_DATA1
P10 CL_RST1#
CL_CLK_WLAN 53
CL_DATA_WLAN 53
-CL_RST_WLAN 53
M10 PEG_A_CLKRQ#/GPIO47 -PCH_PEG_A_CLKRQ
AB37 CLKOUT_PEG_A_N
AB38 CLKOUT_PEG_A_P
AV22 CLKOUT_DMI_N
AU22 CLKOUT_DMI_P
-CPU_CLK_100M 4
CPU_CLK_100M 4
AM12 CLKOUT_DP_N
AM13 CLKOUT_DP_P
BF18 CLKIN_DMI_N
BE18 CLKIN_DMI_P
CLKIN_DMI_PCH R164 10KR2J-3-GP
BJ30 CLKIN_GND1_N
BG30 CLKIN_GND1_P
CLKIN_GND1_PCH R165 10KR2J-3-GP
G24 CLKIN_DOT_96N
E24 CLKIN_DOT_96P
CLKIN_DOT_PCH R166 10KR2J-3-GP
AK7 CLKIN_SATA_N
AK5 CLKIN_SATA_P
CLKIN_SATA_PCH R167 10KR2J-3-GP
K45 REFCLK14IN
PEFCLK14IN R168 10KR2J-3-GP
H45 CLKIN_PCILOOPBACK
PCICLK_FB_33M 28
V47 XTAL25_IN PCH_25M_IN
V49 XTAL25_OUT PCH_25M_OUT
C227 SC12P50V2JN-3GP
VCC1R05B
Y47 XCLK_RCOMP
R1310 90D9R2F-1-GP
R170 1MR2J-1-GP
H.ELE 25M
12P 20PPM
HSX321G
X2
XTAL-25MHZ-155-GP
R173 0R2J-2-GP PCH_25M_OUT_R
C228 SC12P50V2JN-3GP
VCC3B
K43 CLKOUTFLEX0/GPIO64
F47 CLKOUTFLEX1/GPIO65
H47 CLKOUTFLEX2/GPIO66
K49 CLKOUTFLEX3/GPIO67
R1321 4K7R2F-GP
R1322 4K7R2F-GP
R1323 4K7R2F-GP
R1324 4K7R2F-GP
DOCKID0
DOCKID1
DOCKID2
DOCKID3
DOCKID[3..0] 59
GP

<Core Design>

緯創資通 **Wistron Corporation**
21F, 88, Sec.1, Hsin Tai Wu Rd., Hsichih,
Taipei Hsien 221, Taiwan, R.O.C.

Title
PCH(2/9):PCI-E/SMBUS/CLK

Size	Document Number	Rev
Custom	Dasher-2	-1

Date: Friday, March 09, 2012 Sheet 25 of 101

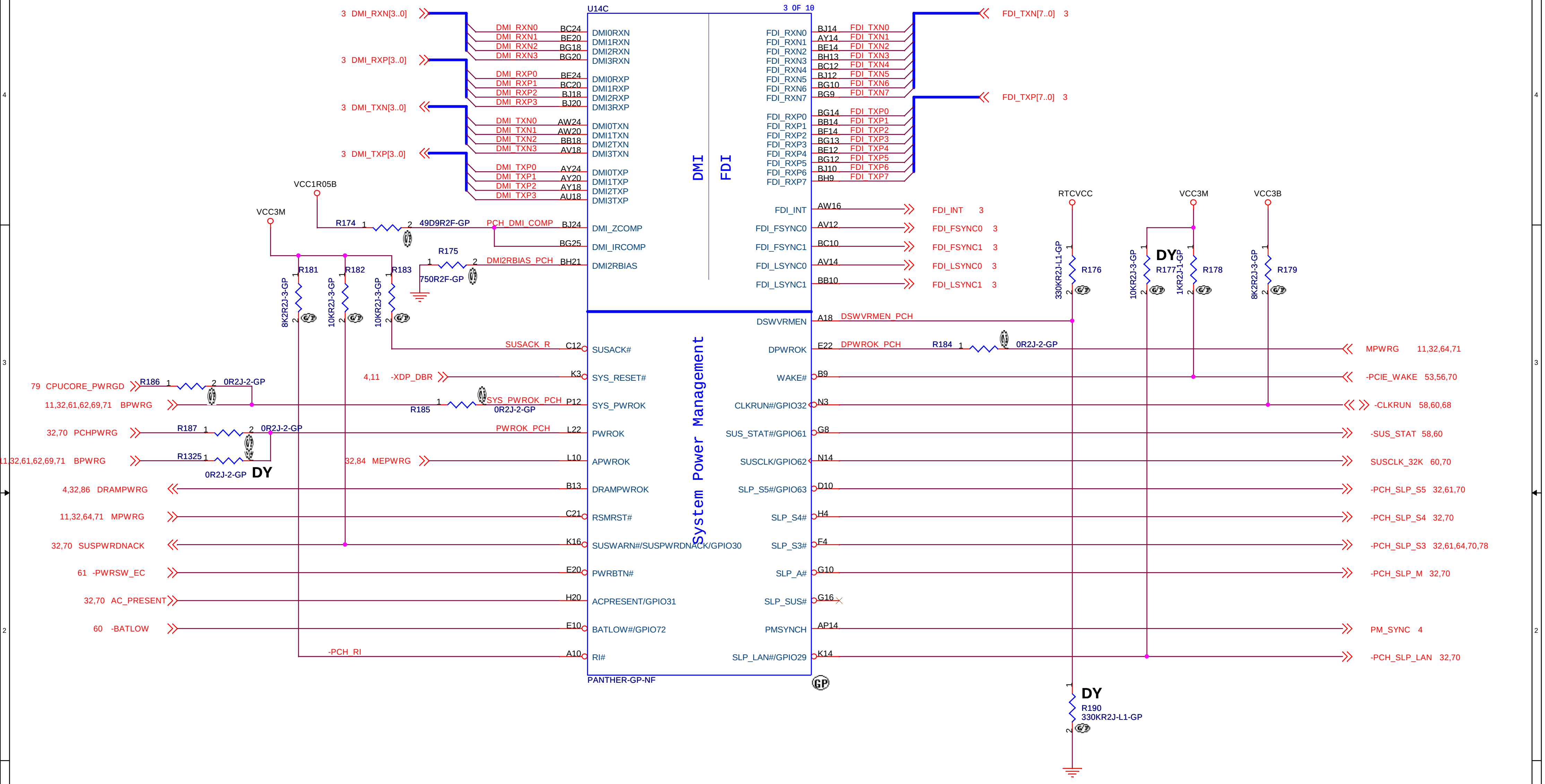
U14C
3 OF 10
DMI
FDI
System Power Management
PANTHER-GP-NF
3 DMI_RXN[3..0]
3 DMI_RXP[3..0]
3 DMI_TXN[3..0]
3 DMI_TXP[3..0]
DMI_RXN0 BC24 DMI0RXN
DMI_RXN1 BE20 DMI1RXN
DMI_RXN2 BG18 DMI2RXN
DMI_RXN3 BG20 DMI3RXN
DMI_RXP0 BE24 DMI0RXP
DMI_RXP1 BC20 DMI1RXP
DMI_RXP2 BJ18 DMI2RXP
DMI_RXP3 BJ20 DMI3RXP
DMI_TXN0 AW24 DMI0TXN
DMI_TXN1 AW20 DMI1TXN
DMI_TXN2 BB18 DMI2TXN
DMI_TXN3 AV18 DMI3TXN
DMI_TXP0 AY24 DMI0TXP
DMI_TXP1 AY20 DMI1TXP
DMI_TXP2 AY18 DMI2TXP
DMI_TXP3 AU18 DMI3TXP
VCC1R05B
R174 49D9R2F-GP PCH_DMI_COMP BJ24 DMI_ZCOMP
BG25 DMI_IRCOMP
R175 750R2F-GP DMI2RBIAS_PCH BH21 DMI2RBIAS
FDI_RXN0 BJ14 FDI_TXN0
FDI_RXN1 AY14 FDI_TXN1
FDI_RXN2 BE14 FDI_TXN2
FDI_RXN3 BH13 FDI_TXN3
FDI_RXN4 BC12 FDI_TXN4
FDI_RXN5 BJ12 FDI_TXN5
FDI_RXN6 BG10 FDI_TXN6
FDI_RXN7 BG9 FDI_TXN7
FDI_TXN[7..0] 3
FDI_RXP0 BG14 FDI_TXP0
FDI_RXP1 BB14 FDI_TXP1
FDI_RXP2 BF14 FDI_TXP2
FDI_RXP3 BG13 FDI_TXP3
FDI_RXP4 BE12 FDI_TXP4
FDI_RXP5 BG12 FDI_TXP5
FDI_RXP6 BJ10 FDI_TXP6
FDI_RXP7 BH9 FDI_TXP7
FDI_TXP[7..0] 3
FDI_INT AW16 FDI_INT 3
FDI_FSYNC0 AV12 FDI_FSYNC0 3
FDI_FSYNC1 BC10 FDI_FSYNC1 3
FDI_LSYNC0 AV14 FDI_LSYNC0 3
FDI_LSYNC1 BB10 FDI_LSYNC1 3
VCC3M
R181 8K2R2J-3-GP
R182 10KR2J-3-GP
R183 10KR2J-3-GP
SUSACK_R C12 SUSACK#
4,11 -XDP_DBR K3 SYS_RESET#
79 CPUCORE_PWRGD R186 0R2J-2-GP
11,32,61,62,69,71 BPWRG R185 0R2J-2-GP SYS_PWROK_PCH P12 SYS_PWROK
32,70 PCHPWRG R187 0R2J-2-GP PWROK_PCH L22 PWROK
11,32,61,62,69,71 BPWRG R1325 0R2J-2-GP DY
32,84 MEPWRG L10 APWROK
4,32,86 DRAMPWRG B13 DRAMPWROK
11,32,64,71 MPWRG C21 RSMRST#
32,70 SUSPWRDNACK K16 SUSWARN#/SUSPWRDNACK/GPIO30
61 -PWRSW_EC E20 PWRBTN#
32,70 AC_PRESENT H20 ACPRESENT/GPIO31
60 -BATLOW E10 BATLOW#/GPIO72
-PCH_RI A10 RI#
DSWVRMEN A18 DSWVRMEN_PCH
DPWROK E22 DPWROK_PCH R184 0R2J-2-GP MPWRG 11,32,64,71
WAKE# B9 -PCIE_WAKE 53,56,70
CLKRUN#/GPIO32 N3 -CLKRUN 58,60,68
SUS_STAT#/GPIO61 G8 -SUS_STAT 58,60
SUSCLK/GPIO62 N14 SUSCLK_32K 60,70
SLP_S5#/GPIO63 D10 -PCH_SLP_S5 32,61,70
SLP_S4# H4 -PCH_SLP_S4 32,70
SLP_S3# F4 -PCH_SLP_S3 32,61,64,70,78
SLP_A# G10 -PCH_SLP_M 32,70
SLP_SUS# G16
PMSYNCH AP14 PM_SYNC 4
SLP_LAN#/GPIO29 K14 -PCH_SLP_LAN 32,70
RTCVCC R176 330KR2J-L1-GP
VCC3M R177 10KR2J-3-GP DY
R178 1KR2J-1-GP
VCC3B R179 8K2R2J-3-GP
DY R190 330KR2J-L1-GP
GP

<Core Design>

緯創資通 **Wistron Corporation**
21F, 88, Sec.1, Hsin Tai Wu Rd., Hsichih,
Taipei Hsien 221, Taiwan, R.O.C.

Title **PCH(3/9):DMI/FDI/PM**

Size	Document Number	Rev
A3	**Dasher-2**	-1

Date: Friday, March 09, 2012 Sheet 26 of 101

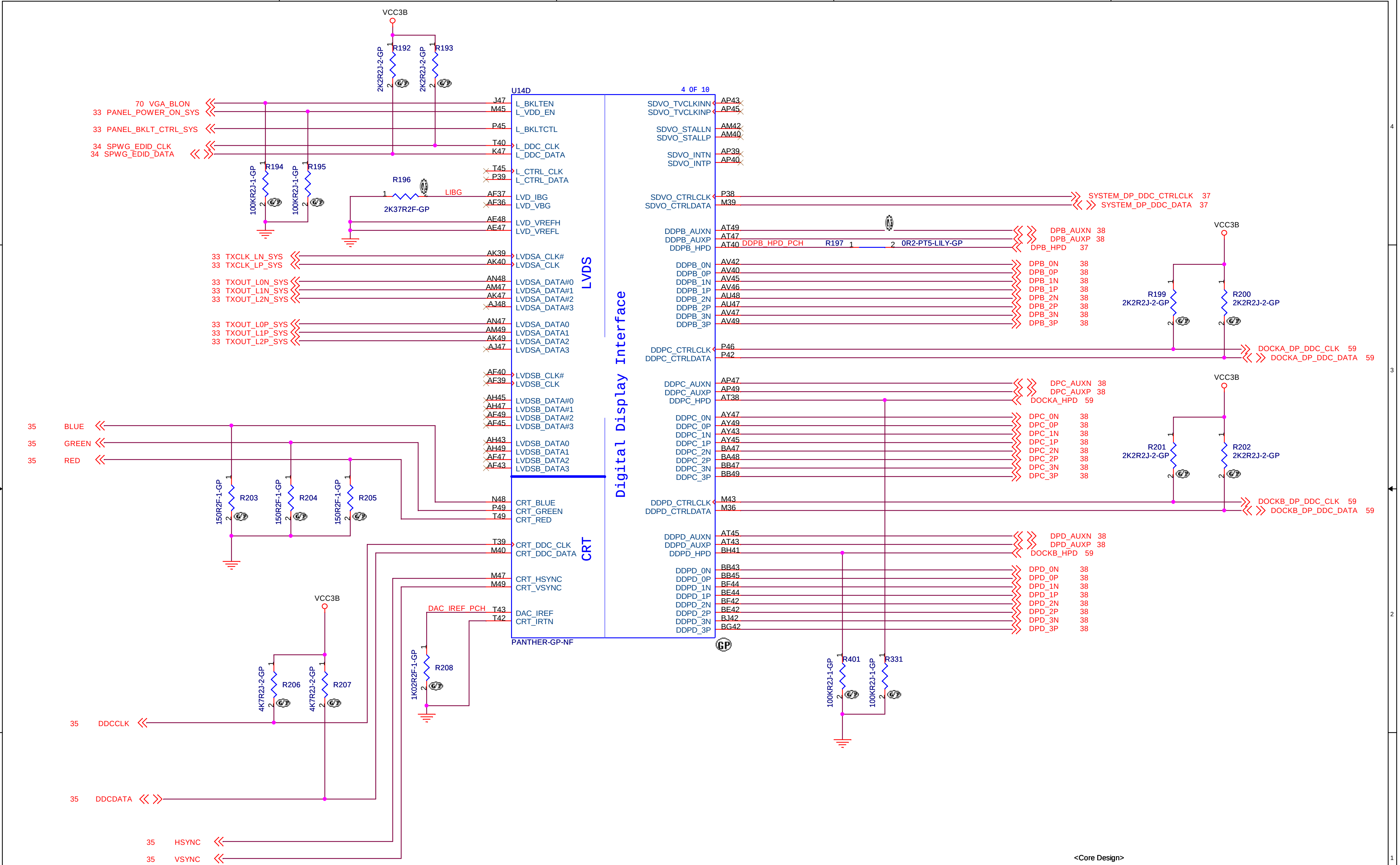
VCC3B
R192
2K2R2J-2-GP
R193
2K2R2J-2-GP
U14D
4 OF 10
70 VGA_BLON
33 PANEL_POWER_ON_SYS
33 PANEL_BKLT_CTRL_SYS
34 SPWG_EDID_CLK
34 SPWG_EDID_DATA
J47 L_BKLTEN
M45 L_VDD_EN
P45 L_BKLTCTL
T40 L_DDC_CLK
K47 L_DDC_DATA
T45 L_CTRL_CLK
P39 L_CTRL_DATA
AF37 LVD_IBG
AF36 LVD_VBG
AE48 LVD_VREFH
AE47 LVD_VREFL
R194
100KR2J-1-GP
R195
100KR2J-1-GP
R196
2K37R2F-GP
LIBG
33 TXCLK_LN_SYS
33 TXCLK_LP_SYS
AK39 LVDSA_CLK#
AK40 LVDSA_CLK
33 TXOUT_L0N_SYS
33 TXOUT_L1N_SYS
33 TXOUT_L2N_SYS
AN48 LVDSA_DATA#0
AM47 LVDSA_DATA#1
AK47 LVDSA_DATA#2
AJ48 LVDSA_DATA#3
33 TXOUT_L0P_SYS
33 TXOUT_L1P_SYS
33 TXOUT_L2P_SYS
AN47 LVDSA_DATA0
AM49 LVDSA_DATA1
AK49 LVDSA_DATA2
AJ47 LVDSA_DATA3
AF40 LVDSB_CLK#
AF39 LVDSB_CLK
AH45 LVDSB_DATA#0
AH47 LVDSB_DATA#1
AF49 LVDSB_DATA#2
AF45 LVDSB_DATA#3
AH43 LVDSB_DATA0
AH49 LVDSB_DATA1
AF47 LVDSB_DATA2
AF43 LVDSB_DATA3
LVDS
Digital Display Interface
CRT
35 BLUE
35 GREEN
35 RED
R203
150R2F-1-GP
R204
150R2F-1-GP
R205
150R2F-1-GP
N48 CRT_BLUE
P49 CRT_GREEN
T49 CRT_RED
T39 CRT_DDC_CLK
M40 CRT_DDC_DATA
M47 CRT_HSYNC
M49 CRT_VSYNC
T43 DAC_IREF
T42 CRT_IRTN
DAC_IREF_PCH
R208
1K02R2F-1-GP
PANTHER-GP-NF
VCC3B
R206
4K7R2J-2-GP
R207
4K7R2J-2-GP
35 DDCCLK
35 DDCDATA
35 HSYNC
35 VSYNC
SDVO_TVCLKINN AP43
SDVO_TVCLKINP AP45
SDVO_STALLN AM42
SDVO_STALLP AM40
SDVO_INTN AP39
SDVO_INTP AP40
SDVO_CTRLCLK P38
SDVO_CTRLDATA M39
SYSTEM_DP_DDC_CTRLCLK 37
SYSTEM_DP_DDC_DATA 37
DDPB_AUXN AT49
DDPB_AUXP AT47
DDPB_HPD AT40
DDPB_HPD_PCH
R197
0R2-PT5-LILY-GP
DPB_AUXN 38
DPB_AUXP 38
DPB_HPD 37
DDPB_0N AV42
DDPB_0P AV40
DDPB_1N AV45
DDPB_1P AV46
DDPB_2N AU48
DDPB_2P AU47
DDPB_3N AV47
DDPB_3P AV49
DPB_0N 38
DPB_0P 38
DPB_1N 38
DPB_1P 38
DPB_2N 38
DPB_2P 38
DPB_3N 38
DPB_3P 38
VCC3B
R199
2K2R2J-2-GP
R200
2K2R2J-2-GP
DDPC_CTRLCLK P46
DDPC_CTRLDATA P42
DOCKA_DP_DDC_CLK 59
DOCKA_DP_DDC_DATA 59
DDPC_AUXN AP47
DDPC_AUXP AP49
DDPC_HPD AT38
DPC_AUXN 38
DPC_AUXP 38
DOCKA_HPD 59
DDPC_0N AY47
DDPC_0P AY49
DDPC_1N AY43
DDPC_1P AY45
DDPC_2N BA47
DDPC_2P BA48
DDPC_3N BB47
DDPC_3P BB49
DPC_0N 38
DPC_0P 38
DPC_1N 38
DPC_1P 38
DPC_2N 38
DPC_2P 38
DPC_3N 38
DPC_3P 38
VCC3B
R201
2K2R2J-2-GP
R202
2K2R2J-2-GP
DDPD_CTRLCLK M43
DDPD_CTRLDATA M36
DOCKB_DP_DDC_CLK 59
DOCKB_DP_DDC_DATA 59
DDPD_AUXN AT45
DDPD_AUXP AT43
DDPD_HPD BH41
DPD_AUXN 38
DPD_AUXP 38
DOCKB_HPD 59
DDPD_0N BB43
DDPD_0P BB45
DDPD_1N BF44
DDPD_1P BE44
DDPD_2N BF42
DDPD_2P BE42
DDPD_3N BJ42
DDPD_3P BG42
DPD_0N 38
DPD_0P 38
DPD_1N 38
DPD_1P 38
DPD_2N 38
DPD_2P 38
DPD_3N 38
DPD_3P 38
R401
100KR2J-1-GP
R331
100KR2J-1-GP
GP

<Core Design>

緯創資通 **Wistron Corporation**
21F, 88, Sec.1, Hsin Tai Wu Rd., Hsichih,
Taipei Hsien 221, Taiwan, R.O.C.

Title	PCH(4/9):LVDS/CRT/DDI		
Size A3	Document Number Dasher-2		Rev -1
Date: Friday, March 09, 2012	Sheet 27	of	101

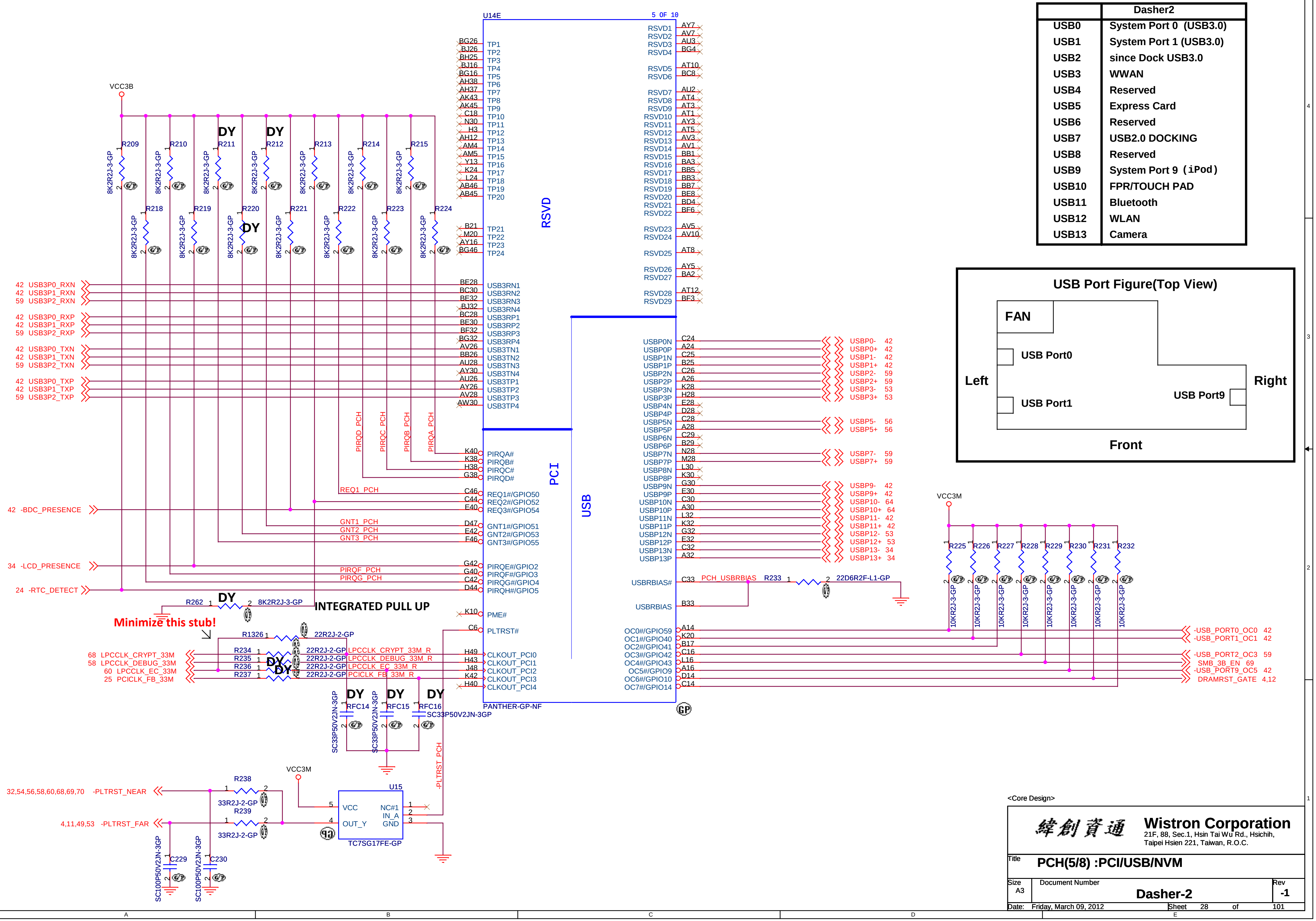
U14E
5 OF 10
RSVD
PCI
USB
PANTHER-GP-NF
VCC3B
R209
R210
R211
R212
R213
R214
R215
R218
R219
R220
R221
R222
R223
R224
8K2R2J-3-GP
DY
TP1
TP2
TP3
TP4
TP5
TP6
TP7
TP8
TP9
TP10
TP11
TP12
TP13
TP14
TP15
TP16
TP17
TP18
TP19
TP20
TP21
TP22
TP23
TP24
RSVD1
RSVD2
RSVD3
RSVD4
RSVD5
RSVD6
RSVD7
RSVD8
RSVD9
RSVD10
RSVD11
RSVD12
RSVD13
RSVD14
RSVD15
RSVD16
RSVD17
RSVD18
RSVD19
RSVD20
RSVD21
RSVD22
RSVD23
RSVD24
RSVD25
RSVD26
RSVD27
RSVD28
RSVD29
42 USB3P0_RXN
42 USB3P1_RXN
59 USB3P2_RXN
42 USB3P0_RXP
42 USB3P1_RXP
59 USB3P2_RXP
42 USB3P0_TXN
42 USB3P1_TXN
59 USB3P2_TXN
42 USB3P0_TXP
42 USB3P1_TXP
59 USB3P2_TXP
USB3RN1
USB3RN2
USB3RN3
USB3RN4
USB3RP1
USB3RP2
USB3RP3
USB3RP4
USB3TN1
USB3TN2
USB3TN3
USB3TN4
USB3TP1
USB3TP2
USB3TP3
USB3TP4
PIRQD_PCH
PIRQC_PCH
PIRQB_PCH
PIRQA_PCH
PIRQA#
PIRQB#
PIRQC#
PIRQD#
REQ1_PCH
REQ1#/GPIO50
REQ2#/GPIO52
REQ3#/GPIO54
42 -BDC_PRESENCE
GNT1_PCH
GNT2_PCH
GNT3_PCH
GNT1#/GPIO51
GNT2#/GPIO53
GNT3#/GPIO55
34 -LCD_PRESENCE
PIRQF_PCH
PIRQG_PCH
24 -RTC_DETECT
PIRQE#/GPIO2
PIRQF#/GPIO3
PIRQG#/GPIO4
PIRQH#/GPIO5
R262
8K2R2J-3-GP
INTEGRATED PULL UP
Minimize this stub!
PME#
PLTRST#
R1326
22R2J-2-GP
68 LPCCLK_CRYPT_33M
58 LPCCLK_DEBUG_33M
60 LPCCLK_EC_33M
25 PCICLK_FB_33M
R234
R235
R236
R237
22R2J-2-GP
LPCCLK_CRYPT_33M_R
LPCCLK_DEBUG_33M_R
LPCCLK_EC_33M_R
PCICLK_FB_33M_R
CLKOUT_PCI0
CLKOUT_PCI1
CLKOUT_PCI2
CLKOUT_PCI3
CLKOUT_PCI4
RFC14
RFC15
RFC16
SC33P50V2JN-3GP
-PLTRST_PCH
USBP0N
USBP0P
USBP1N
USBP1P
USBP2N
USBP2P
USBP3N
USBP3P
USBP4N
USBP4P
USBP5N
USBP5P
USBP6N
USBP6P
USBP7N
USBP7P
USBP8N
USBP8P
USBP9N
USBP9P
USBP10N
USBP10P
USBP11N
USBP11P
USBP12N
USBP12P
USBP13N
USBP13P
USBP0- 42
USBP0+ 42
USBP1- 42
USBP1+ 42
USBP2- 59
USBP2+ 59
USBP3- 53
USBP3+ 53
USBP5- 56
USBP5+ 56
USBP7- 59
USBP7+ 59
USBP9- 42
USBP9+ 42
USBP10- 64
USBP10+ 64
USBP11- 42
USBP11+ 42
USBP12- 53
USBP12+ 53
USBP13- 34
USBP13+ 34
USBRBIAS#
USBRBIAS
PCH_USBRBIAS
R233
22D6R2F-L1-GP
OC0#/GPIO59
OC1#/GPIO40
OC2#/GPIO41
OC3#/GPIO42
OC4#/GPIO43
OC5#/GPIO9
OC6#/GPIO10
OC7#/GPIO14
VCC3M
R225
R226
R227
R228
R229
R230
R231
R232
10KR2J-3-GP
-USB_PORT0_OC0 42
-USB_PORT1_OC1 42
-USB_PORT2_OC3 59
SMB_3B_EN 69
-USB_PORT9_OC5 42
DRAMRST_GATE 4,12
32,54,56,58,60,68,69,70 -PLTRST_NEAR
4,11,49,53 -PLTRST_FAR
R238
R239
33R2J-2-GP
U15
VCC
OUT_Y
NC#1
IN_A
GND
TC7SG17FE-GP
C229
C230
SC100P50V2JN-3GP
USB Port Figure(Top View)
FAN
USB Port0
USB Port1
USB Port9
Left
Right
Front

	Dasher2
USB0	System Port 0 (USB3.0)
USB1	System Port 1 (USB3.0)
USB2	since Dock USB3.0
USB3	WWAN
USB4	Reserved
USB5	Express Card
USB6	Reserved
USB7	USB2.0 DOCKING
USB8	Reserved
USB9	System Port 9 (iPod)
USB10	FPR/TOUCH PAD
USB11	Bluetooth
USB12	WLAN
USB13	Camera

<Core Design>

緯創資通
Wistron Corporation
21F, 88, Sec.1, Hsin Tai Wu Rd., Hsichih,
Taipei Hsien 221, Taiwan, R.O.C.

Title **PCH(5/8) :PCI/USB/NVM**

Size A3
Document Number **Dasher-2**
Rev -1

Date: Friday, March 09, 2012
Sheet 28 of 101

GPIO8	INTEGRATED CLOCKING
HIGH	DISABLE(BTM)
LOW	ENABLE(FCIM)

GPIO15	ME CRYPTO STRAP
HIGH	WITH CONFIDENTIALITY
LOW	NO CONFIDENTIALITY

GPIO34	LPM CAPABILITY
HIGH	LPM CAPABLE PLANAR
LOW	LPM NON-SUPPORT PLANAR

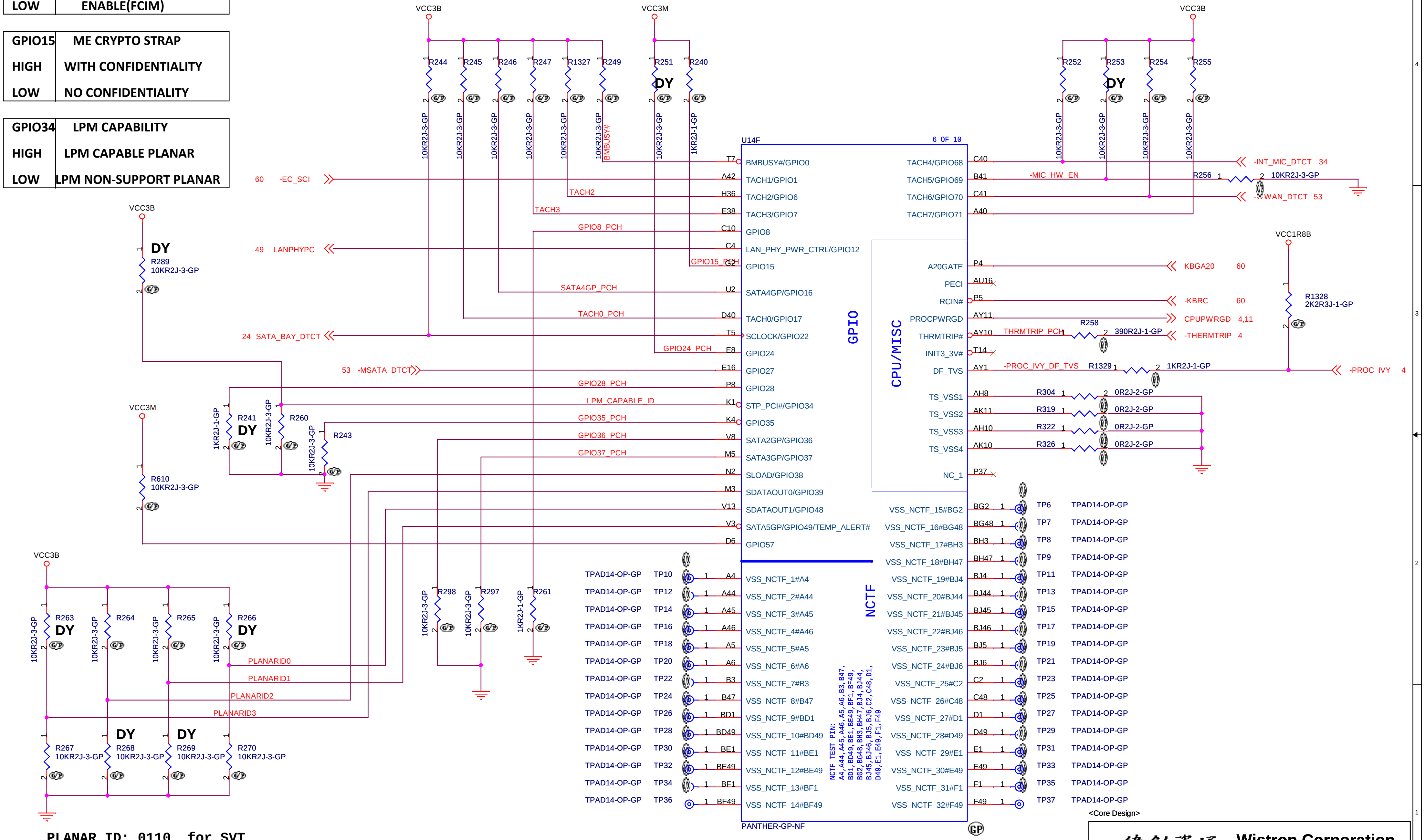

VCC3B
VCC3M
VCC3B
R244
R245
R246
R247
R1327
R249
R251
R240
DY
10KR2J-3-GP
1KR2J-1-GP
BMBUSY#
R252
R253
R254
R255
U14F
6 OF 10
60 -EC_SCI
TACH2
TACH3
GPIO8_PCH
49 LANPHYPC
GPIO15_PCH
SATA4GP_PCH
TACH0_PCH
24 SATA_BAY_DTCT
GPIO24_PCH
53 -MSATA_DTCT
GPIO28_PCH
LPM_CAPABLE_ID
GPIO35_PCH
GPIO36_PCH
GPIO37_PCH
T7
A42
H36
E38
C10
C4
G2
U2
D40
T5
E8
E16
P8
K1
K4
V8
M5
N2
M3
V13
V3
D6
BMBUSY#/GPIO0
TACH1/GPIO1
TACH2/GPIO6
TACH3/GPIO7
GPIO8
LAN_PHY_PWR_CTRL/GPIO12
GPIO15
SATA4GP/GPIO16
TACH0/GPIO17
SCLOCK/GPIO22
GPIO24
GPIO27
GPIO28
STP_PCI#/GPIO34
GPIO35
SATA2GP/GPIO36
SATA3GP/GPIO37
SLOAD/GPIO38
SDATAOUT0/GPIO39
SDATAOUT1/GPIO48
SATA5GP/GPIO49/TEMP_ALERT#
GPIO57
GPIO
TACH4/GPIO68
TACH5/GPIO69
TACH6/GPIO70
TACH7/GPIO71
C40
B41
C41
A40
-INT_MIC_DTCT 34
-MIC_HW_EN
R256
10KR2J-3-GP
-WWAN_DTCT 53
VCC1R8B
CPU/MISC
A20GATE
PECI
RCIN#
PROCPWRGD
THRMTRIP#
INIT3_3V#
DF_TVS
TS_VSS1
TS_VSS2
TS_VSS3
TS_VSS4
NC_1
P4
AU16
P5
AY11
AY10
T14
AY1
AH8
AK11
AH10
AK10
P37
KBGA20 60
-KBRC 60
CPUPWRGD 4,11
THRMTRIP_PCH
R258
390R2J-1-GP
-THERMTRIP 4
R1328
2K2R3J-1-GP
-PROC_IVY_DF_TVS
R1329
1KR2J-1-GP
-PROC_IVY 4
R304
R319
R322
R326
0R2J-2-GP
VCC3B
R289
10KR2J-3-GP
VCC3M
R610
R241
R260
R243
1KR2J-1-GP
VCC3B
R263
R264
R265
R266
PLANARID0
PLANARID1
PLANARID2
PLANARID3
R267
R268
R269
R270
R298
R297
R261
NCTF
VSS_NCTF_1#A4
VSS_NCTF_2#A44
VSS_NCTF_3#A45
VSS_NCTF_4#A46
VSS_NCTF_5#A5
VSS_NCTF_6#A6
VSS_NCTF_7#B3
VSS_NCTF_8#B47
VSS_NCTF_9#BD1
VSS_NCTF_10#BD49
VSS_NCTF_11#BE1
VSS_NCTF_12#BE49
VSS_NCTF_13#BF1
VSS_NCTF_14#BF49
A4
A44
A45
A46
A5
A6
B3
B47
BD1
BD49
BE1
BE49
BF1
BF49
TPAD14-OP-GP
TP10
TP12
TP14
TP16
TP18
TP20
TP22
TP24
TP26
TP28
TP30
TP32
TP34
TP36
NCTF TEST PIN:
A4,A44,A45,A46,A5,A6,B3,B47,
BD1,BD49,BE1,BE49,BF1,BF49,
BG2,BG48,BH3,BH47,BJ4,BJ44,
BJ45,BJ46,BJ5,BJ6,C2,C48,D1,
D49,E1,E49,F1,F49
VSS_NCTF_15#BG2
VSS_NCTF_16#BG48
VSS_NCTF_17#BH3
VSS_NCTF_18#BH47
VSS_NCTF_19#BJ4
VSS_NCTF_20#BJ44
VSS_NCTF_21#BJ45
VSS_NCTF_22#BJ46
VSS_NCTF_23#BJ5
VSS_NCTF_24#BJ6
VSS_NCTF_25#C2
VSS_NCTF_26#C48
VSS_NCTF_27#D1
VSS_NCTF_28#D49
VSS_NCTF_29#E1
VSS_NCTF_30#E49
VSS_NCTF_31#F1
VSS_NCTF_32#F49
BG2
BG48
BH3
BH47
BJ4
BJ44
BJ45
BJ46
BJ5
BJ6
C2
C48
D1
D49
E1
E49
F1
F49
TP6
TP7
TP8
TP9
TP11
TP13
TP15
TP17
TP19
TP21
TP23
TP25
TP27
TP29
TP31
TP33
TP35
TP37
PANTHER-GP-NF
GP
A
B
C
D
E
1
2
3
4

PLANAR ID: 0110 for SVT

<Core Design>

緯創資通 **Wistron Corporation**
21F, 88, Sec.1, Hsin Tai Wu Rd., Hsichih,
Taipei Hsien 221, Taiwan, R.O.C.

Title	PCH(6/9):GPIO/NCTF/RSVD	
Size A3	Document Number Dasher-2	Rev -1
Date: Friday, March 09, 2012	Sheet 29 of 101	

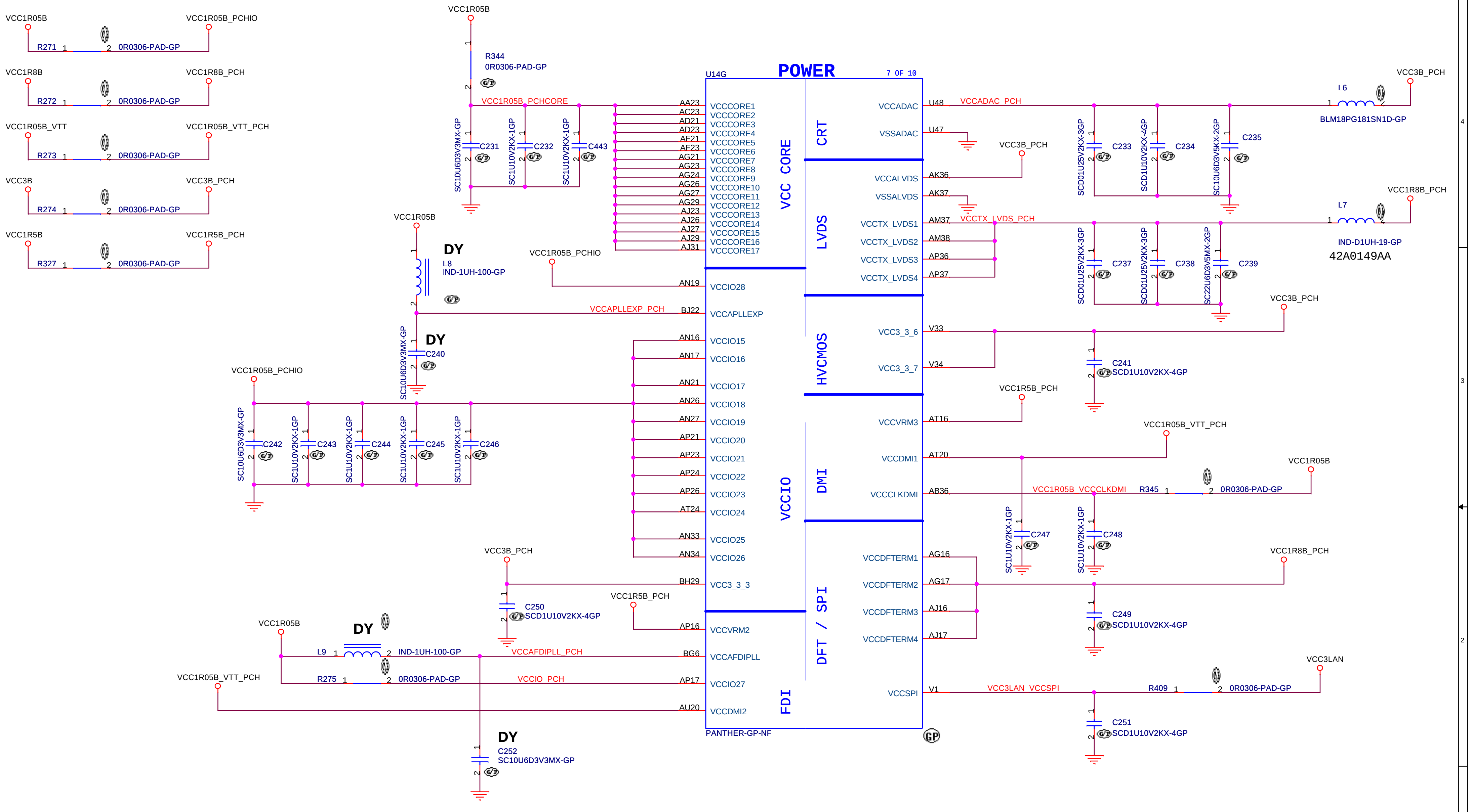
POWER
U14G
7 OF 10
VCC CORE
VCCIO
CRT
LVDS
HVCMOS
DMI
DFT / SPI
FDI
PANTHER-GP-NF
VCC1R05B
VCC1R05B_PCHIO
R271
0R0306-PAD-GP
VCC1R8B
VCC1R8B_PCH
R272
0R0306-PAD-GP
VCC1R05B_VTT
VCC1R05B_VTT_PCH
R273
0R0306-PAD-GP
VCC3B
VCC3B_PCH
R274
0R0306-PAD-GP
VCC1R5B
VCC1R5B_PCH
R327
0R0306-PAD-GP
R344
0R0306-PAD-GP
VCC1R05B_PCHCORE
C231
C232
C443
SC10U6D3V3MX-GP
SC1U10V2KX-1GP
SC1U10V2KX-1GP
DY
L8
IND-1UH-100-GP
VCCAPLLEXP_PCH
DY
C240
SC10U6D3V3MX-GP
C242
C243
C244
C245
C246
SC10U6D3V3MX-GP
SC1U10V2KX-1GP
SC1U10V2KX-1GP
SC1U10V2KX-1GP
SC1U10V2KX-1GP
C250
SCD1U10V2KX-4GP
VCC1R5B_PCH
DY
L9
IND-1UH-100-GP
VCCAFDIPLL_PCH
R275
0R0306-PAD-GP
VCCIO_PCH
VCC1R05B_VTT_PCH
DY
C252
SC10U6D3V3MX-GP
AA23 VCCCORE1
AC23 VCCCORE2
AD21 VCCCORE3
AD23 VCCCORE4
AF21 VCCCORE5
AF23 VCCCORE6
AG21 VCCCORE7
AG23 VCCCORE8
AG24 VCCCORE9
AG26 VCCCORE10
AG27 VCCCORE11
AG29 VCCCORE12
AJ23 VCCCORE13
AJ26 VCCCORE14
AJ27 VCCCORE15
AJ29 VCCCORE16
AJ31 VCCCORE17
AN19 VCCIO28
BJ22 VCCAPLLEXP
AN16 VCCIO15
AN17 VCCIO16
AN21 VCCIO17
AN26 VCCIO18
AN27 VCCIO19
AP21 VCCIO20
AP23 VCCIO21
AP24 VCCIO22
AP26 VCCIO23
AT24 VCCIO24
AN33 VCCIO25
AN34 VCCIO26
BH29 VCC3_3_3
AP16 VCCVRM2
BG6 VCCAFDIPLL
AP17 VCCIO27
AU20 VCCDMI2
VCCADAC U48
VSSADAC U47
VCCALVDS AK36
VSSALVDS AK37
VCCTX_LVDS1 AM37
VCCTX_LVDS2 AM38
VCCTX_LVDS3 AP36
VCCTX_LVDS4 AP37
VCC3_3_6 V33
VCC3_3_7 V34
VCCVRM3 AT16
VCCDMI1 AT20
VCCCLKDMI AB36
VCCDFTERM1 AG16
VCCDFTERM2 AG17
VCCDFTERM3 AJ16
VCCDFTERM4 AJ17
VCCSPI V1
VCCADAC_PCH
VCC3B_PCH
L6
BLM18PG181SN1D-GP
C233
C234
C235
SCD01U25V2KX-3GP
SCD1U10V2KX-4GP
SC10U6D3V5KX-2GP
VCC1R8B_PCH
L7
IND-D1UH-19-GP
42A0149AA
VCCTX_LVDS_PCH
C237
C238
C239
SCD01U25V2KX-3GP
SCD01U25V2KX-3GP
SC22U6D3V5MX-2GP
VCC3B_PCH
C241
SCD1U10V2KX-4GP
VCC1R5B_PCH
VCC1R05B_VTT_PCH
VCC1R05B
VCC1R05B_VCCCLKDMI
R345
0R0306-PAD-GP
C247
C248
SC1U10V2KX-1GP
SC1U10V2KX-1GP
VCC1R8B_PCH
C249
SCD1U10V2KX-4GP
VCC3LAN
VCC3LAN_VCCSPI
R409
0R0306-PAD-GP
C251
SCD1U10V2KX-4GP

<Core Design>

緯創資通 **Wistron Corporation**
21F, 88, Sec.1, Hsin Tai Wu Rd., Hsichih,
Taipei Hsien 221, Taiwan, R.O.C.

Title	PCH(7/9):Power		
Size A3	Document Number Dasher-2		Rev -1
Date: Tuesday, February 21, 2012	Sheet 30	of	101

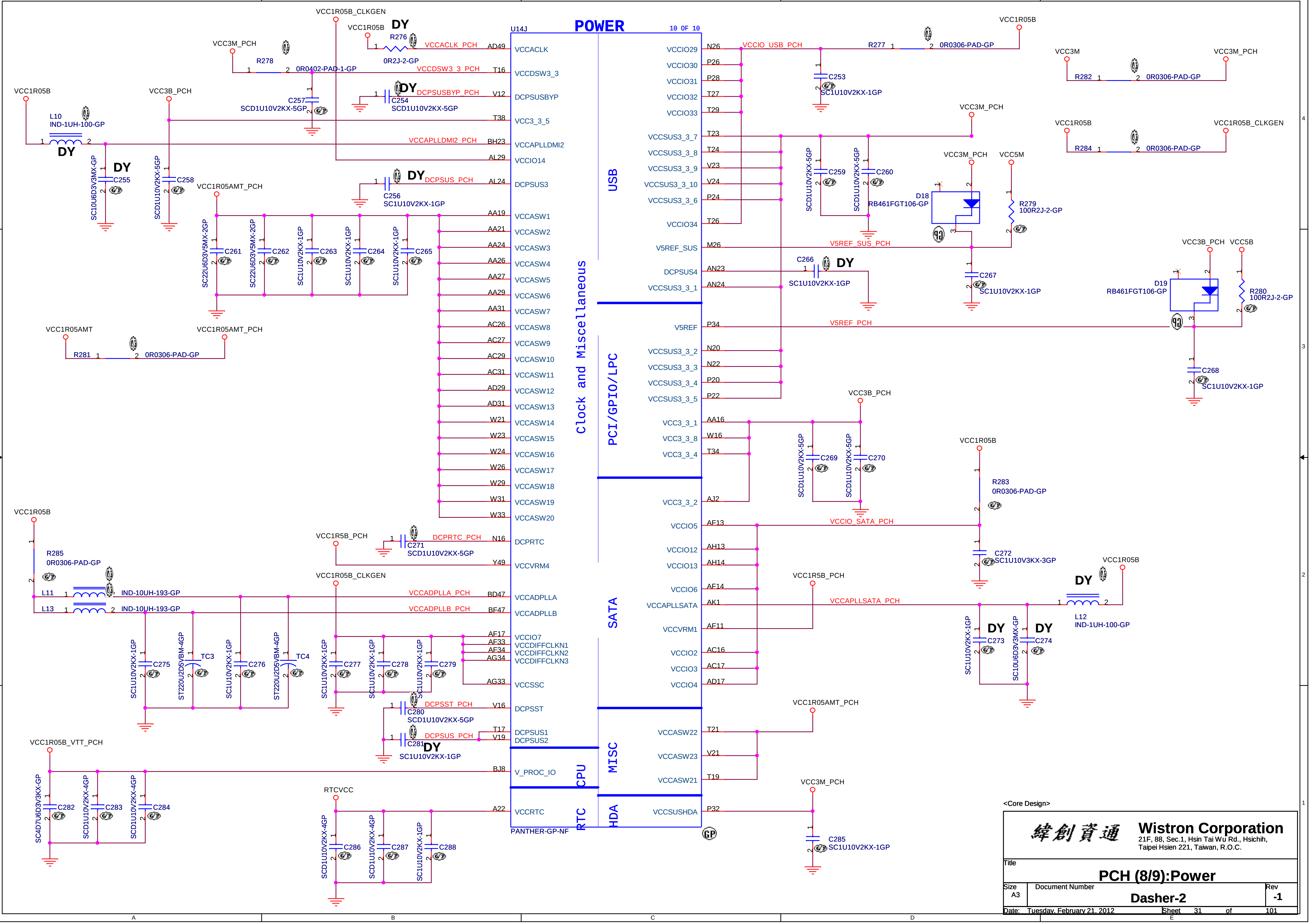
U14J
POWER
10 OF 10
VCC1R05B_CLKGEN
VCC1R05B
DY
R276
0R2J-2-GP
VCCACLK_PCH
AD49
VCCACLK
VCC3M_PCH
R278
0R0402-PAD-1-GP
VCCDSW3_3_PCH
T16
VCCDSW3_3
C257
SCD1U10V2KX-5GP
C254
SCD1U10V2KX-5GP
DCPSUSBYP_PCH
V12
DCPSUSBYP
VCC1R05B
VCC3B_PCH
L10
IND-1UH-100-GP
T38
VCC3_3_5
VCCAPLLDMI2_PCH
BH23
VCCAPLLDMI2
AL29
VCCIO14
C255
SC10U6D3V3MX-GP
C258
SCD1U10V2KX-5GP
C256
SC1U10V2KX-1GP
DCPSUS_PCH
AL24
DCPSUS3
VCC1R05AMT_PCH
AA19
VCCASW1
AA21
VCCASW2
AA24
VCCASW3
AA26
VCCASW4
AA27
VCCASW5
AA29
VCCASW6
AA31
VCCASW7
AC26
VCCASW8
AC27
VCCASW9
AC29
VCCASW10
AC31
VCCASW11
AD29
VCCASW12
AD31
VCCASW13
W21
VCCASW14
W23
VCCASW15
W24
VCCASW16
W26
VCCASW17
W29
VCCASW18
W31
VCCASW19
W33
VCCASW20
C261
SC22U6D3V5MX-2GP
C262
SC22U6D3V5MX-2GP
C263
SC1U10V2KX-1GP
C264
SC1U10V2KX-1GP
C265
SC1U10V2KX-1GP
VCC1R05AMT
VCC1R05AMT_PCH
R281
0R0306-PAD-GP
Clock and Miscellaneous
VCC1R5B_PCH
C271
SCD1U10V2KX-5GP
DCPRTC_PCH
N16
DCPRTC
Y49
VCCVRM4
VCC1R05B
R285
0R0306-PAD-GP
L11
IND-10UH-193-GP
L13
IND-10UH-193-GP
VCC1R05B_CLKGEN
VCCADPLLA_PCH
BD47
VCCADPLLA
VCCADPLLB_PCH
BF47
VCCADPLLB
AF17
AF33
AF34
AG34
VCCIO7
VCCDIFFCLKN1
VCCDIFFCLKN2
VCCDIFFCLKN3
AG33
VCCSSC
C275
SC1U10V2KX-1GP
TC3
ST220U2D5VBM-4GP
C276
SC1U10V2KX-1GP
TC4
ST220U2D5VBM-4GP
C277
SC1U10V2KX-1GP
C278
SC1U10V2KX-1GP
C279
SC1U10V2KX-1GP
C280
SCD1U10V2KX-5GP
DCPSST_PCH
V16
DCPSST
C281
SC1U10V2KX-1GP
DCPSUS_PCH
T17
V19
DCPSUS1
DCPSUS2
VCC1R05B_VTT_PCH
BJ8
V_PROC_IO
CPU
C282
SC4D7U6D3V3KX-GP
C283
SCD1U10V2KX-4GP
C284
SCD1U10V2KX-4GP
RTCVCC
A22
VCCRTC
RTC
PANTHER-GP-NF
C286
SCD1U10V2KX-4GP
C287
SCD1U10V2KX-4GP
C288
SCD1U10V2KX-1GP
N26
VCCIO29
VCCIO_USB_PCH
P26
VCCIO30
P28
VCCIO31
T27
VCCIO32
T29
VCCIO33
R277
0R0306-PAD-GP
C253
SC1U10V2KX-1GP
T23
VCCSUS3_3_7
T24
VCCSUS3_3_8
V23
VCCSUS3_3_9
V24
VCCSUS3_3_10
P24
VCCSUS3_3_6
T26
VCCIO34
USB
M26
V5REF_SUS
V5REF_SUS_PCH
AN23
DCPSUS4
AN24
VCCSUS3_3_1
C266
SC1U10V2KX-1GP
VCC3M
VCC3M_PCH
R282
0R0306-PAD-GP
VCC1R05B
VCC1R05B_CLKGEN
R284
0R0306-PAD-GP
C259
SCD1U10V2KX-5GP
C260
SCD1U10V2KX-5GP
VCC3M_PCH
VCC5M
D18
RB461FGT106-GP
R279
100R2J-2-GP
C267
SC1U10V2KX-1GP
VCC3B_PCH
VCC5B
D19
RB461FGT106-GP
R280
100R2J-2-GP
P34
V5REF
V5REF_PCH
C268
SC1U10V2KX-1GP
N20
VCCSUS3_3_2
N22
VCCSUS3_3_3
P20
VCCSUS3_3_4
P22
VCCSUS3_3_5
PCI/GPIO/LPC
AA16
VCC3_3_1
W16
VCC3_3_8
T34
VCC3_3_4
VCC3B_PCH
C269
SCD1U10V2KX-5GP
C270
SCD1U10V2KX-5GP
AJ2
VCC3_3_2
VCC1R05B
R283
0R0306-PAD-GP
AF13
VCCIO5
VCCIO_SATA_PCH
AH13
VCCIO12
AH14
VCCIO13
C272
SC1U10V3KX-3GP
AF14
VCCIO6
AK1
VCCAPLLSATA
VCCAPLLSATA_PCH
VCC1R5B_PCH
VCC1R05B
L12
IND-1UH-100-GP
SATA
AF11
VCCVRM1
AC16
VCCIO2
AC17
VCCIO3
AD17
VCCIO4
C273
SC1U10V2KX-1GP
C274
SC10U6D3V3MX-GP
VCC1R05AMT_PCH
T21
VCCASW22
V21
VCCASW23
T19
VCCASW21
MISC
VCC3M_PCH
P32
VCCSUSHDA
HDA
C285
SC1U10V2KX-1GP
A
B
C
D
E
1
2
3
4

<Core Design>

緯創資通 **Wistron Corporation**

21F, 88, Sec.1, Hsin Tai Wu Rd., Hsichih,
Taipei Hsien 221, Taiwan, R.O.C.

Title

PCH (8/9):Power

Size	Document Number	Rev
A3	Dasher-2	-1

Date: Tuesday, February 21, 2012 Sheet 31 of 101

TEST PAD FOR METS/APS

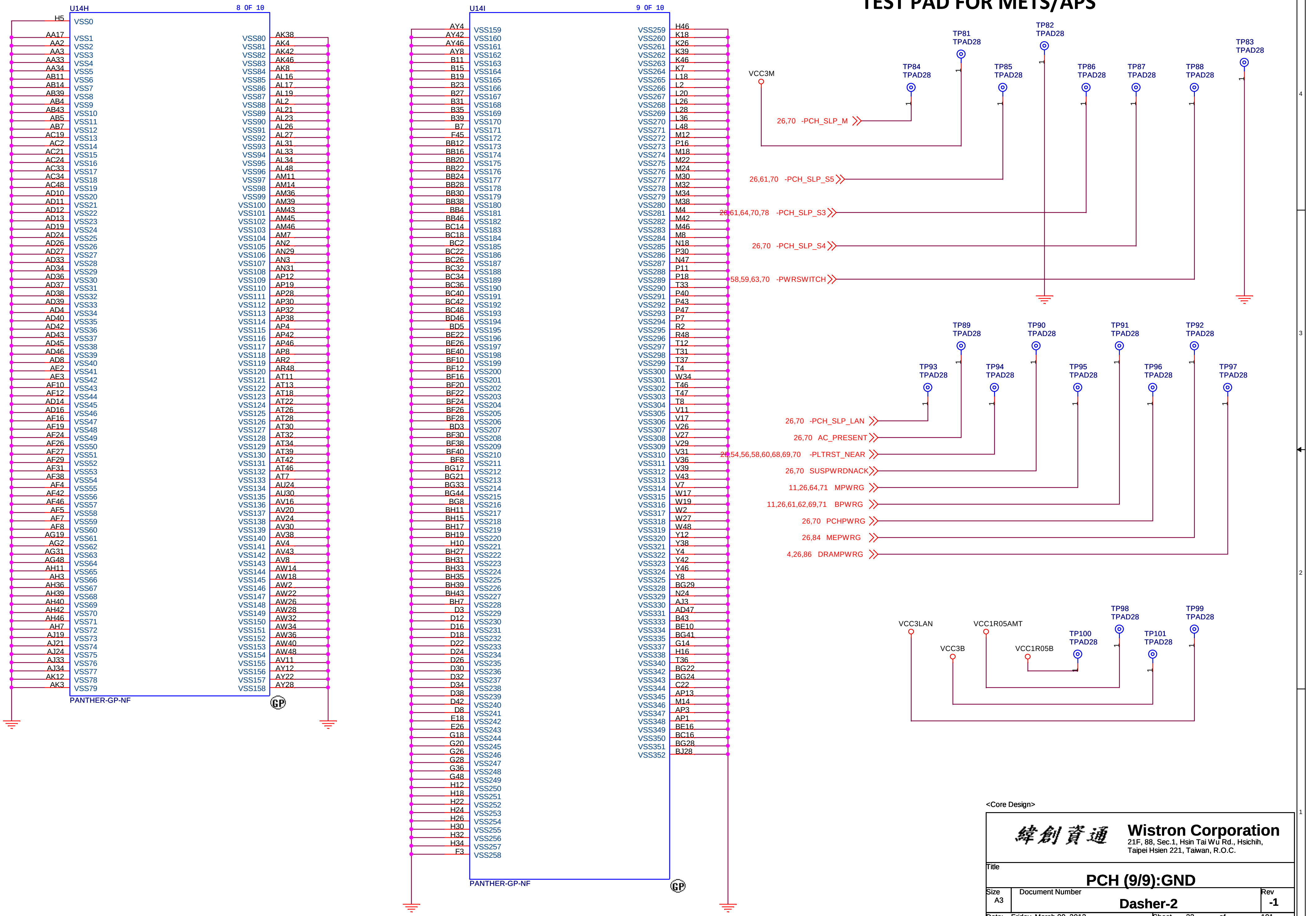
U14H
8 OF 10
H5 VSS0
AA17 VSS1
AA2 VSS2
AA3 VSS3
AA33 VSS4
AA34 VSS5
AB11 VSS6
AB14 VSS7
AB39 VSS8
AB4 VSS9
AB43 VSS10
AB5 VSS11
AB7 VSS12
AC19 VSS13
AC2 VSS14
AC21 VSS15
AC24 VSS16
AC33 VSS17
AC34 VSS18
AC48 VSS19
AD10 VSS20
AD11 VSS21
AD12 VSS22
AD13 VSS23
AD19 VSS24
AD24 VSS25
AD26 VSS26
AD27 VSS27
AD33 VSS28
AD34 VSS29
AD36 VSS30
AD37 VSS31
AD38 VSS32
AD39 VSS33
AD4 VSS34
AD40 VSS35
AD42 VSS36
AD43 VSS37
AD45 VSS38
AD46 VSS39
AD8 VSS40
AE2 VSS41
AE3 VSS42
AF10 VSS43
AF12 VSS44
AD14 VSS45
AD16 VSS46
AF16 VSS47
AF19 VSS48
AF24 VSS49
AF26 VSS50
AF27 VSS51
AF29 VSS52
AF31 VSS53
AF38 VSS54
AF4 VSS55
AF42 VSS56
AF46 VSS57
AF5 VSS58
AF7 VSS59
AF8 VSS60
AG19 VSS61
AG2 VSS62
AG31 VSS63
AG48 VSS64
AH11 VSS65
AH3 VSS66
AH36 VSS67
AH39 VSS68
AH40 VSS69
AH42 VSS70
AH46 VSS71
AH7 VSS72
AJ19 VSS73
AJ21 VSS74
AJ24 VSS75
AJ33 VSS76
AJ34 VSS77
AK12 VSS78
AK3 VSS79
VSS80 AK38
VSS81 AK4
VSS82 AK42
VSS83 AK46
VSS84 AK8
VSS85 AL16
VSS86 AL17
VSS87 AL19
VSS88 AL2
VSS89 AL21
VSS90 AL23
VSS91 AL26
VSS92 AL27
VSS93 AL31
VSS94 AL33
VSS95 AL34
VSS96 AL48
VSS97 AM11
VSS98 AM14
VSS99 AM36
VSS100 AM39
VSS101 AM43
VSS102 AM45
VSS103 AM46
VSS104 AM7
VSS105 AN2
VSS106 AN29
VSS107 AN3
VSS108 AN31
VSS109 AP12
VSS110 AP19
VSS111 AP28
VSS112 AP30
VSS113 AP32
VSS114 AP38
VSS115 AP4
VSS116 AP42
VSS117 AP46
VSS118 AP8
VSS119 AR2
VSS120 AR48
VSS121 AT11
VSS122 AT13
VSS123 AT18
VSS124 AT22
VSS125 AT26
VSS126 AT28
VSS127 AT30
VSS128 AT32
VSS129 AT34
VSS130 AT39
VSS131 AT42
VSS132 AT46
VSS133 AT7
VSS134 AU24
VSS135 AU30
VSS136 AV16
VSS137 AV20
VSS138 AV24
VSS139 AV30
VSS140 AV38
VSS141 AV4
VSS142 AV43
VSS143 AV8
VSS144 AW14
VSS145 AW18
VSS146 AW2
VSS147 AW22
VSS148 AW26
VSS149 AW28
VSS150 AW32
VSS151 AW34
VSS152 AW36
VSS153 AW40
VSS154 AW48
VSS155 AV11
VSS156 AY12
VSS157 AY22
VSS158 AY28
PANTHER-GP-NF
GP
U14I
9 OF 10
AY4 VSS159
AY42 VSS160
AY46 VSS161
AY8 VSS162
B11 VSS163
B15 VSS164
B19 VSS165
B23 VSS166
B27 VSS167
B31 VSS168
B35 VSS169
B39 VSS170
B7 VSS171
F45 VSS172
BB12 VSS173
BB16 VSS174
BB20 VSS175
BB22 VSS176
BB24 VSS177
BB28 VSS178
BB30 VSS179
BB38 VSS180
BB4 VSS181
BB46 VSS182
BC14 VSS183
BC18 VSS184
BC2 VSS185
BC22 VSS186
BC26 VSS187
BC32 VSS188
BC34 VSS189
BC36 VSS190
BC40 VSS191
BC42 VSS192
BC48 VSS193
BD46 VSS194
BD5 VSS195
BE22 VSS196
BE26 VSS197
BE40 VSS198
BF10 VSS199
BF12 VSS200
BF16 VSS201
BF20 VSS202
BF22 VSS203
BF24 VSS204
BF26 VSS205
BF28 VSS206
BD3 VSS207
BF30 VSS208
BF38 VSS209
BF40 VSS210
BF8 VSS211
BG17 VSS212
BG21 VSS213
BG33 VSS214
BG44 VSS215
BG8 VSS216
BH11 VSS217
BH15 VSS218
BH17 VSS219
BH19 VSS220
H10 VSS221
BH27 VSS222
BH31 VSS223
BH33 VSS224
BH35 VSS225
BH39 VSS226
BH43 VSS227
BH7 VSS228
D3 VSS229
D12 VSS230
D16 VSS231
D18 VSS232
D22 VSS233
D24 VSS234
D26 VSS235
D30 VSS236
D32 VSS237
D34 VSS238
D38 VSS239
D42 VSS240
D8 VSS241
E18 VSS242
E26 VSS243
G18 VSS244
G20 VSS245
G26 VSS246
G28 VSS247
G36 VSS248
G48 VSS249
H12 VSS250
H18 VSS251
H22 VSS252
H24 VSS253
H26 VSS254
H30 VSS255
H32 VSS256
H34 VSS257
F3 VSS258
VSS259 H46
VSS260 K18
VSS261 K26
VSS262 K39
VSS263 K46
VSS264 K7
VSS265 L18
VSS266 L2
VSS267 L20
VSS268 L26
VSS269 L28
VSS270 L36
VSS271 L48
VSS272 M12
VSS273 P16
VSS274 M18
VSS275 M22
VSS276 M24
VSS277 M30
VSS278 M32
VSS279 M34
VSS280 M38
VSS281 M4
VSS282 M42
VSS283 M46
VSS284 M8
VSS285 N18
VSS286 P30
VSS287 N47
VSS288 P11
VSS289 P18
VSS290 T33
VSS291 P40
VSS292 P43
VSS293 P47
VSS294 P7
VSS295 R2
VSS296 R48
VSS297 T12
VSS298 T31
VSS299 T37
VSS300 T4
VSS301 W34
VSS302 T46
VSS303 T47
VSS304 T8
VSS305 V11
VSS306 V17
VSS307 V26
VSS308 V27
VSS309 V29
VSS310 V31
VSS311 V36
VSS312 V39
VSS313 V43
VSS314 V7
VSS315 W17
VSS316 W19
VSS317 W2
VSS318 W27
VSS319 W48
VSS320 Y12
VSS321 Y38
VSS322 Y4
VSS323 Y42
VSS324 Y46
VSS325 Y8
VSS328 BG29
VSS329 N24
VSS330 AJ3
VSS331 AD47
VSS333 B43
VSS334 BE10
VSS335 BG41
VSS337 G14
VSS338 H16
VSS340 T36
VSS342 BG22
VSS343 BG24
VSS344 C22
VSS345 AP13
VSS346 M14
VSS347 AP3
VSS348 AP1
VSS349 BE16
VSS350 BC16
VSS351 BG28
VSS352 BJ28
PANTHER-GP-NF
GP
TP81 TPAD28
TP82 TPAD28
TP83 TPAD28
TP84 TPAD28
TP85 TPAD28
TP86 TPAD28
TP87 TPAD28
TP88 TPAD28
VCC3M
26,70 -PCH_SLP_M
26,61,70 -PCH_SLP_S5
26,61,64,70,78 -PCH_SLP_S3
26,70 -PCH_SLP_S4
58,59,63,70 -PWRSWITCH
TP89 TPAD28
TP90 TPAD28
TP91 TPAD28
TP92 TPAD28
TP93 TPAD28
TP94 TPAD28
TP95 TPAD28
TP96 TPAD28
TP97 TPAD28
26,70 -PCH_SLP_LAN
26,70 AC_PRESENT
26,54,56,58,60,68,69,70 -PLTRST_NEAR
26,70 SUSPWRDNACK
11,26,64,71 MPWRG
11,26,61,62,69,71 BPWRG
26,70 PCHPWRG
26,84 MEPWRG
4,26,86 DRAMPWRG
VCC3LAN
VCC1R05AMT
VCC3B
VCC1R05B
TP98 TPAD28
TP99 TPAD28
TP100 TPAD28
TP101 TPAD28

<Core Design>

緯創資通 **Wistron Corporation**
21F, 88, Sec.1, Hsin Tai Wu Rd., Hsichih,
Taipei Hsien 221, Taiwan, R.O.C.

Title
PCH (9/9):GND

Size A3
Document Number Dasher-2
Rev -1

Date: Friday, March 09, 2012
Sheet 32 of 101

supplier	Vendor P/N	Wistron P/N
Pericom	PIHDMI412-BZHE	71.03412.B0G
TI	TS3DV421RUAR	71.03421.003

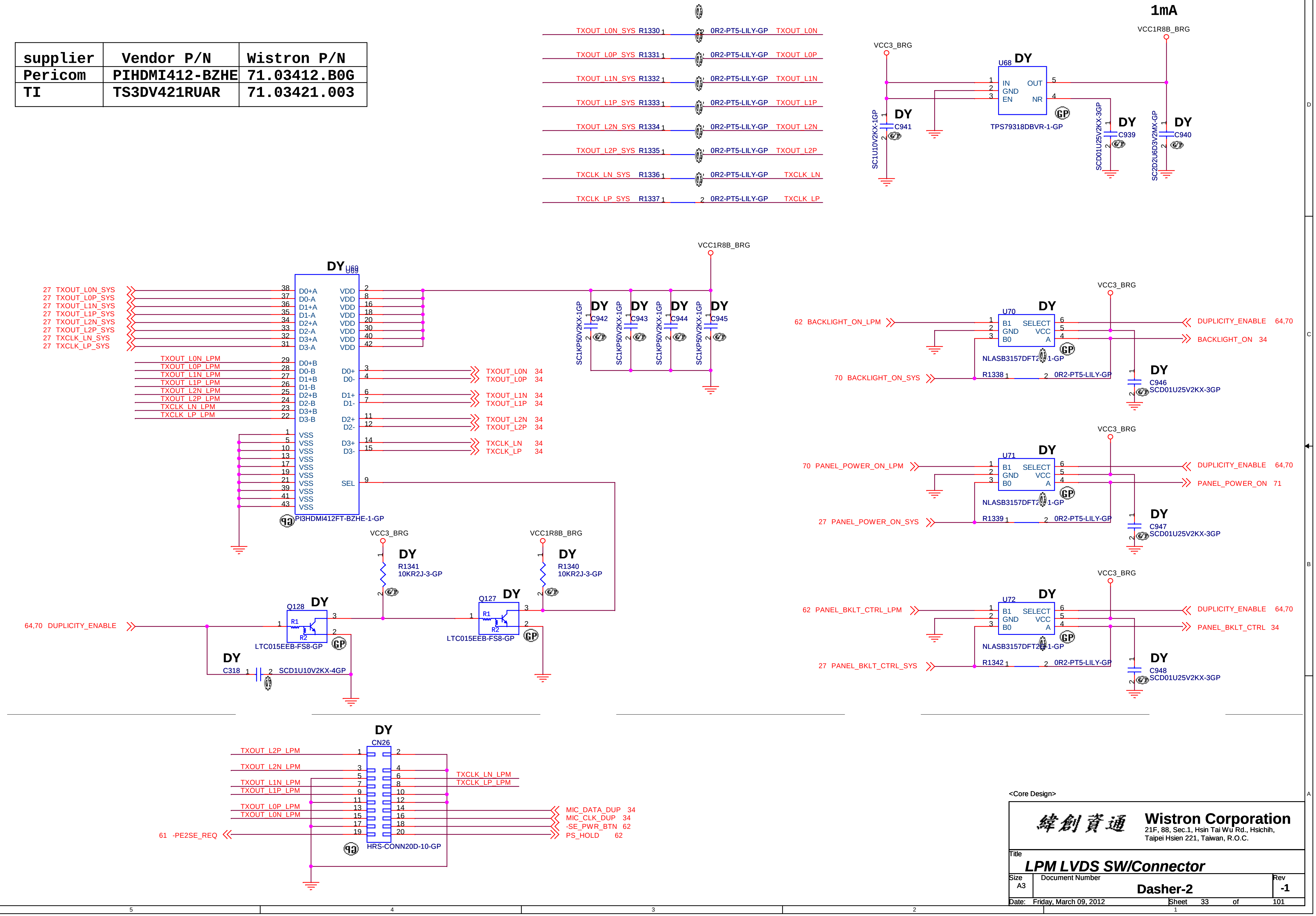
1mA
VCC1R8B_BRG
VCC3_BRG
U68 DY
IN OUT GND EN NR
TPS79318DBVR-1-GP
C941 SC1U10V2KX-1GP DY
C939 SCD01U25V2KX-3GP DY
C940 SC2D2U6D3V2MX-GP DY
TXOUT_L0N_SYS R1330 0R2-PT5-LILY-GP TXOUT_L0N
TXOUT_L0P_SYS R1331 0R2-PT5-LILY-GP TXOUT_L0P
TXOUT_L1N_SYS R1332 0R2-PT5-LILY-GP TXOUT_L1N
TXOUT_L1P_SYS R1333 0R2-PT5-LILY-GP TXOUT_L1P
TXOUT_L2N_SYS R1334 0R2-PT5-LILY-GP TXOUT_L2N
TXOUT_L2P_SYS R1335 0R2-PT5-LILY-GP TXOUT_L2P
TXCLK_LN_SYS R1336 0R2-PT5-LILY-GP TXCLK_LN
TXCLK_LP_SYS R1337 0R2-PT5-LILY-GP TXCLK_LP
DY U69
PI3HDMI412FT-BZHE-1-GP
27 TXOUT_L0N_SYS
27 TXOUT_L0P_SYS
27 TXOUT_L1N_SYS
27 TXOUT_L1P_SYS
27 TXOUT_L2N_SYS
27 TXOUT_L2P_SYS
27 TXCLK_LN_SYS
27 TXCLK_LP_SYS
TXOUT_L0N_LPM
TXOUT_L0P_LPM
TXOUT_L1N_LPM
TXOUT_L1P_LPM
TXOUT_L2N_LPM
TXOUT_L2P_LPM
TXCLK_LN_LPM
TXCLK_LP_LPM
D0+A D0-A D1+A D1-A D2+A D2-A D3+A D3-A
D0+B D0-B D1+B D1-B D2+B D2-B D3+B D3-B
VSS VDD SEL
D0+ D0- D1+ D1- D2+ D2- D3+ D3-
TXOUT_L0N 34
TXOUT_L0P 34
TXOUT_L1N 34
TXOUT_L1P 34
TXOUT_L2N 34
TXOUT_L2P 34
TXCLK_LN 34
TXCLK_LP 34
C942 C943 C944 C945 SC1KP50V2KX-1GP DY
VCC3_BRG R1341 10KR2J-3-GP DY
VCC1R8B_BRG R1340 10KR2J-3-GP DY
Q128 DY LTC015EEB-FS8-GP
Q127 DY LTC015EEB-FS8-GP
R1 R2
64,70 DUPLICITY_ENABLE
DY C318 SCD1U10V2KX-4GP
U70 DY
B1 SELECT GND VCC B0 A
NLASB3157DFT2G-1-GP
62 BACKLIGHT_ON_LPM
DUPLICITY_ENABLE 64,70
BACKLIGHT_ON 34
70 BACKLIGHT_ON_SYS
R1338 0R2-PT5-LILY-GP
C946 SCD01U25V2KX-3GP DY
U71 DY
70 PANEL_POWER_ON_LPM
DUPLICITY_ENABLE 64,70
PANEL_POWER_ON 71
27 PANEL_POWER_ON_SYS
R1339 0R2-PT5-LILY-GP
C947 SCD01U25V2KX-3GP DY
U72 DY
62 PANEL_BKLT_CTRL_LPM
DUPLICITY_ENABLE 64,70
PANEL_BKLT_CTRL 34
27 PANEL_BKLT_CTRL_SYS
R1342 0R2-PT5-LILY-GP
C948 SCD01U25V2KX-3GP DY
DY CN26
HRS-CONN20D-10-GP
TXOUT_L2P_LPM
TXOUT_L2N_LPM
TXOUT_L1N_LPM
TXOUT_L1P_LPM
TXOUT_L0P_LPM
TXOUT_L0N_LPM
TXCLK_LN_LPM
TXCLK_LP_LPM
MIC_DATA_DUP 34
MIC_CLK_DUP 34
-SE_PWR_BTN 62
PS_HOLD 62
61 -PE2SE_REQ

<Core Design>

緯創資通 **Wistron Corporation**
21F, 88, Sec.1, Hsin Tai Wu Rd., Hsichih,
Taipei Hsien 221, Taiwan, R.O.C.

Title
LPM LVDS SW/Connector

Size A3
Document Number **Dasher-2**
Rev -1
Date: Friday, March 09, 2012
Sheet 33 of 101

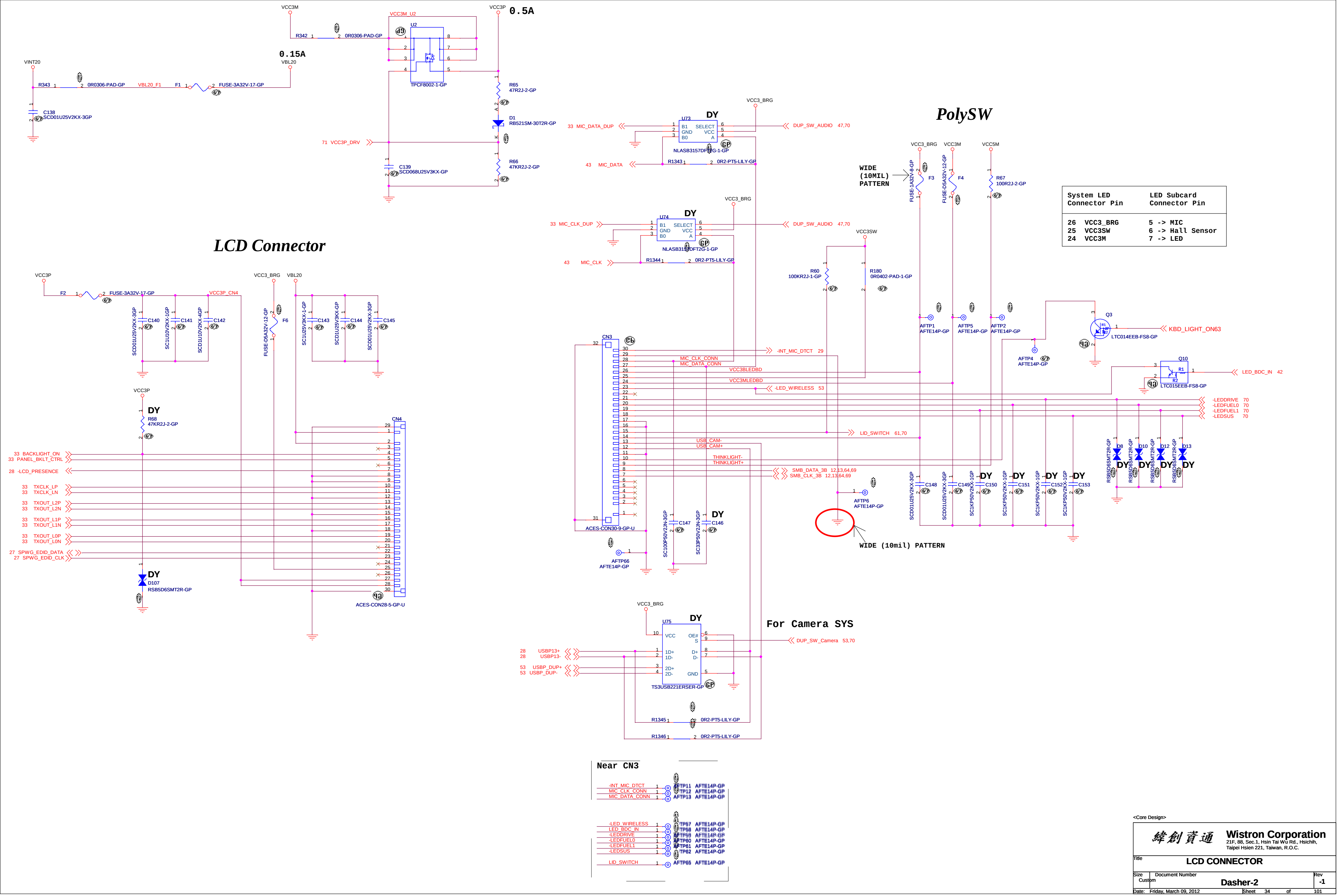
VCC3M
VCC3P
0.5A
VCC3M_U2
U2
R342
0R0306-PAD-GP
TPCF8002-1-GP
0.15A
VBL20
VINT20
R343
0R0306-PAD-GP
VBL20_F1
F1
FUSE-3A32V-17-GP
C138
SCD01U25V2KX-3GP
R65
47R2J-2-GP
D1
RB521SM-30T2R-GP
71 VCC3P_DRV
C139
SCD068U25V3KX-GP
R66
47KR2J-2-GP
LCD Connector
VCC3P
F2
FUSE-3A32V-17-GP
VCC3P_CN4
C140
C141
C142
SCD01U25V2KX-3GP
SC1U10V2KX-1GP
SC1U10V2KX-1GP
VCC3_BRG
VBL20
FUSE-D5A32V-12-GP
F6
C143
C144
C145
SC1U25V3KX-1-GP
SCD1U25V3KX-GP
SCD01U25V2KX-3GP
VCC3P
DY
R68
47KR2J-2-GP
33 BACKLIGHT_ON
33 PANEL_BKLT_CTRL
28 -LCD_PRESENCE
33 TXCLK_LP
33 TXCLK_LN
33 TXOUT_L2P
33 TXOUT_L2N
33 TXOUT_L1P
33 TXOUT_L1N
33 TXOUT_L0P
33 TXOUT_L0N
27 SPWG_EDID_DATA
27 SPWG_EDID_CLK
DY
D107
RSB5D6SMT2R-GP
CN4
ACES-CON28-5-GP-U
DY
U73
VCC3_BRG
33 MIC_DATA_DUP
B1 SELECT
GND VCC
B0 A
NLASB3157DFT2G-1-GP
DUP_SW_AUDIO 47,70
43 MIC_DATA
R1343
0R2-PT5-LILY-GP
DY
U74
VCC3_BRG
33 MIC_CLK_DUP
NLASB3157DFT2G-1-GP
DUP_SW_AUDIO 47,70
43 MIC_CLK
R1344
0R2-PT5-LILY-GP
CN3
ACES-CON30-9-GP-U
-INT_MIC_DTCT 29
MIC_CLK_CONN
MIC_DATA_CONN
VCC3BLEDBD
VCC3MLEDBD
-LED_WIRELESS 53
LID_SWITCH 61,70
USB_CAM-
USB_CAM+
THINKLIGHT-
THINKLIGHT+
SMB_DATA_3B 12,13,64,69
SMB_CLK_3B 12,13,64,69
AFTP66
AFTE14P-GP
C147
C146
SC100P50V2JN-3GP
SC33P50V2JN-3GP
DY
PolySW
WIDE (10MIL) PATTERN
VCC3_BRG
VCC3M
VCC5M
F3
F4
FUSE-1A32V-8-GP
FUSE-D5A32V-12-GP
R67
100R2J-2-GP
VCC3SW
R60
100KR2J-1-GP
R180
0R0402-PAD-1-GP
AFTP1
AFTE14P-GP
AFTP5
AFTE14P-GP
AFTP2
AFTE14P-GP
AFTP4
AFTE14P-GP
Q3
LTC014EEB-FS8-GP
KBD_LIGHT_ON63
Q10
LTC015EEB-FS8-GP
LED_BDC_IN 42
-LEDDRIVE 70
-LEDFUEL0 70
-LEDFUEL1 70
-LEDSUS 70
D8
D10
D12
D13
RSB5D6SMT2R-GP
DY
C148
C149
C150
C151
C152
C153
SCD01U25V2KX-3GP
SC1KP50V2KX-1GP
AFTP6
AFTE14P-GP
WIDE (10mil) PATTERN
VCC3_BRG
DY
U75
TS3USB221ERSER-GP
VCC OE#
S
1D+ D+
1D- D-
2D+
2D- GND
28 USBP13+
28 USBP13-
53 USBP_DUP+
53 USBP_DUP-
DUP_SW_Camera 53,70
For Camera SYS
R1345
R1346
0R2-PT5-LILY-GP
Near CN3
-INT_MIC_DTCT
MIC_CLK_CONN
MIC_DATA_CONN
AFTP11 AFTE14P-GP
AFTP12 AFTE14P-GP
AFTP13 AFTE14P-GP
-LED_WIRELESS
LED_BDC_IN
-LEDDRIVE
-LEDFUEL0
-LEDFUEL1
-LEDSUS
LID_SWITCH
AFTP57 AFTE14P-GP
AFTP58 AFTE14P-GP
AFTP59 AFTE14P-GP
AFTP60 AFTE14P-GP
AFTP61 AFTE14P-GP
AFTP62 AFTE14P-GP
AFTP65 AFTE14P-GP

System LED Connector Pin		LED Subcard Connector Pin
26	VCC3_BRG	5 -> MIC
25	VCC3SW	6 -> Hall Sensor
24	VCC3M	7 -> LED

<Core Design>

緯創資通 **Wistron Corporation**
21F, 88, Sec.1, Hsin Tai Wu Rd., Hsichih,
Taipei Hsien 221, Taiwan, R.O.C.

Title		
LCD CONNECTOR		
Size: Custom	Document Number: Dasher-2	Rev: -1
Date: Friday, March 09, 2012	Sheet 34 of 101	

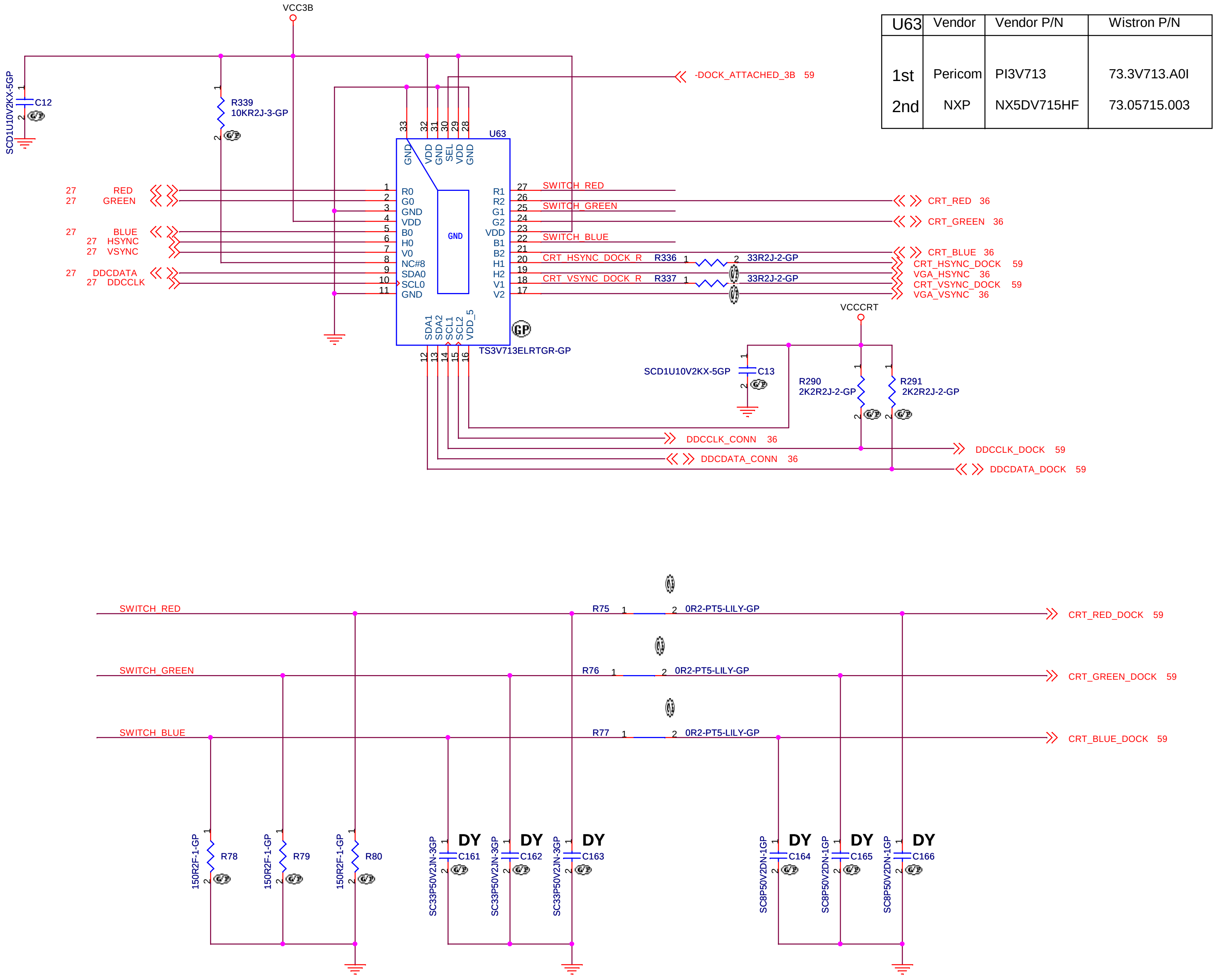
VCC3B
SCD1U10V2KX-5GP
C12
R339
10KR2J-3-GP
U63
GND VDD GND SEL VDD GND
33 32 31 30 29 28
-DOCK_ATTACHED_3B 59
27 RED
27 GREEN
27 BLUE
27 HSYNC
27 VSYNC
27 DDCDATA
27 DDCCLK
1 R0
2 G0
3 GND
4 VDD
5 B0
6 H0
7 V0
8 NC#8
9 SDA0
10 SCL0
11 GND
GND
R1 27
R2 26
G1 25
G2 24
VDD 23
B1 22
B2 21
H1 20
H2 19
V1 18
V2 17
SWITCH_RED
SWITCH_GREEN
SWITCH_BLUE
CRT_HSYNC_DOCK_R
CRT_VSYNC_DOCK_R
R336
R337
33R2J-2-GP
33R2J-2-GP
CRT_RED 36
CRT_GREEN 36
CRT_BLUE 36
CRT_HSYNC_DOCK 59
VGA_HSYNC 36
CRT_VSYNC_DOCK 59
VGA_VSYNC 36
SDA1 SDA2 SCL1 SCL2 VDD_5
12 13 14 15 16
TS3V713ELRTGR-GP
VCCCRT
SCD1U10V2KX-5GP
C13
R290
2K2R2J-2-GP
R291
2K2R2J-2-GP
DDCCLK_CONN 36
DDCCLK_DOCK 59
DDCDATA_CONN 36
DDCDATA_DOCK 59
SWITCH_RED
SWITCH_GREEN
SWITCH_BLUE
R75
R76
R77
0R2-PT5-LILY-GP
CRT_RED_DOCK 59
CRT_GREEN_DOCK 59
CRT_BLUE_DOCK 59
150R2F-1-GP
R78
R79
R80
SC33P50V2JN-3GP
DY
C161
C162
C163
SC8P50V2DN-1GP
C164
C165
C166

U63	Vendor	Vendor P/N	Wistron P/N
1st	Pericom	PI3V713	73.3V713.A0I
2nd	NXP	NX5DV715HF	73.05715.003

<Core Design>

緯創資通 **Wistron Corporation**
21F, 88, Sec.1, Hsin Tai Wu Rd., Hsichih,
Taipei Hsien 221, Taiwan, R.O.C.

Title
CRT SELECTOR

Size A3 | Document Number **Dasher-2** | Rev **-1**

Date: Friday, March 09, 2012 | Sheet 35 of 101

GND GUARDING

EACH SIGNAL WIDTH DEPENDS ON ZO(TRACE IMPEDANCE)

SPACING=20MIL

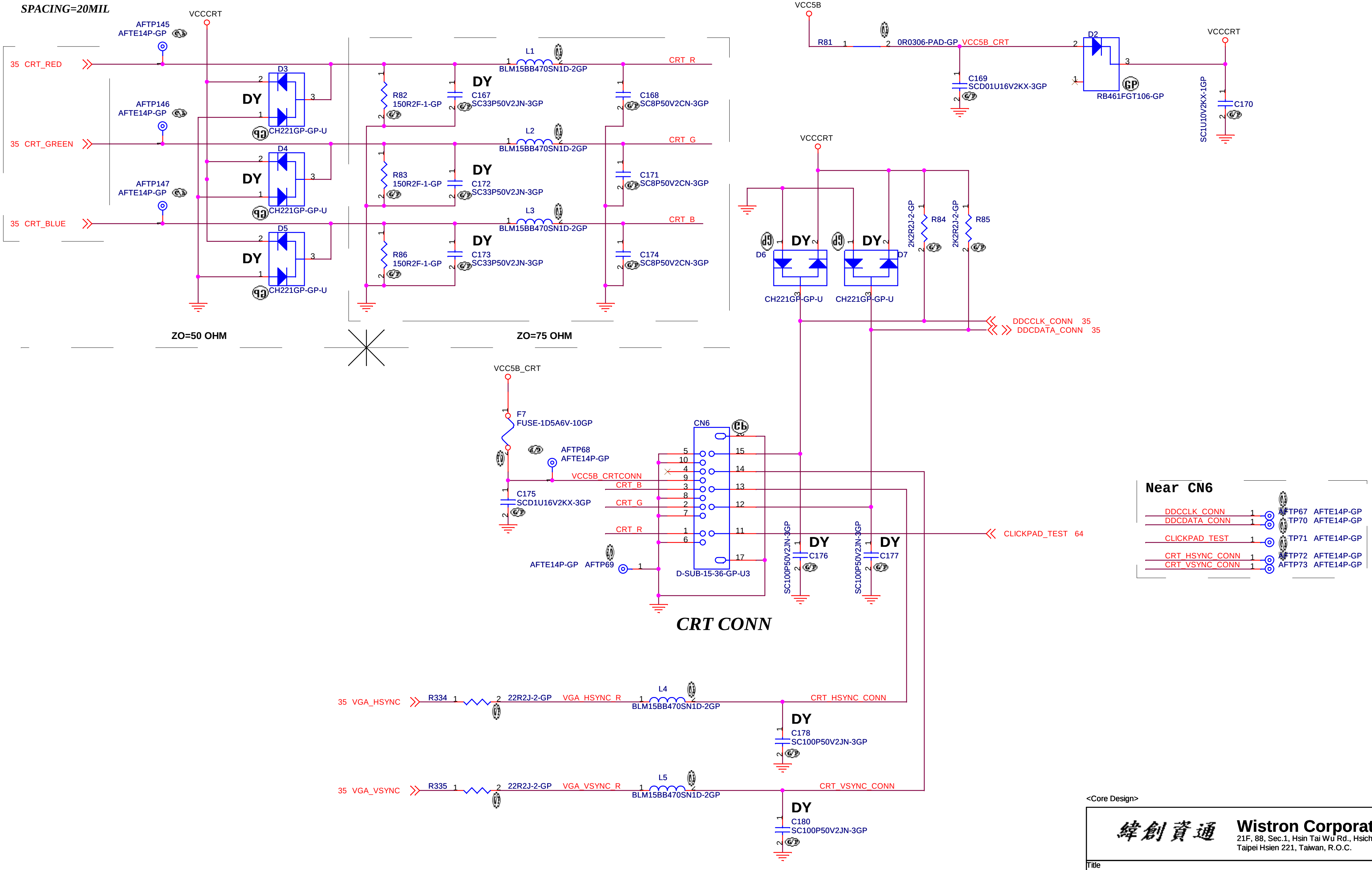
VCCCRT
AFTP145
AFTE14P-GP
35 CRT_RED
AFTP146
AFTE14P-GP
35 CRT_GREEN
AFTP147
AFTE14P-GP
35 CRT_BLUE
D3
D4
D5
DY
CH221GP-GP-U
L1
L2
L3
BLM15BB470SN1D-2GP
R82
R83
R86
150R2F-1-GP
C167
C172
C173
SC33P50V2JN-3GP
C168
C171
C174
SC8P50V2CN-3GP
CRT_R
CRT_G
CRT_B
ZO=50 OHM
ZO=75 OHM
VCC5B
R81
0R0306-PAD-GP
VCC5B_CRT
C169
SCD01U16V2KX-3GP
D2
RB461FGT106-GP
VCCCRT
C170
SC1U10V2KX-1GP
VCCCRT
D6
D7
CH221GP-GP-U
R84
R85
2K2R2J-2-GP
DDCCLK_CONN 35
DDCDATA_CONN 35
VCC5B_CRT
F7
FUSE-1D5A6V-10GP
AFTP68
AFTE14P-GP
VCC5B_CRTCONN
C175
SCD1U16V2KX-3GP
CN6
D-SUB-15-36-GP-U3
AFTE14P-GP AFTP69
C176
C177
SC100P50V2JN-3GP
CLICKPAD_TEST 64
CRT CONN
Near CN6
DDCCLK_CONN
DDCDATA_CONN
CLICKPAD_TEST
CRT_HSYNC_CONN
CRT_VSYNC_CONN
AFTP67 AFTE14P-GP
TP70 AFTE14P-GP
TP71 AFTE14P-GP
AFTP72 AFTE14P-GP
AFTP73 AFTE14P-GP
35 VGA_HSYNC
R334
22R2J-2-GP
VGA_HSYNC_R
L4
BLM15BB470SN1D-2GP
CRT_HSYNC_CONN
C178
SC100P50V2JN-3GP
35 VGA_VSYNC
R335
22R2J-2-GP
VGA_VSYNC_R
L5
BLM15BB470SN1D-2GP
CRT_VSYNC_CONN
C180
SC100P50V2JN-3GP

<Core Design>

緯創資通 **Wistron Corporation**
21F, 88, Sec.1, Hsin Tai Wu Rd., Hsichih,
Taipei Hsien 221, Taiwan, R.O.C.

Title		
Ext CRT Interface		
Size A3	Document Number Dasher-2	Rev -1
Date: Friday, March 09, 2012	Sheet 36 of 101	

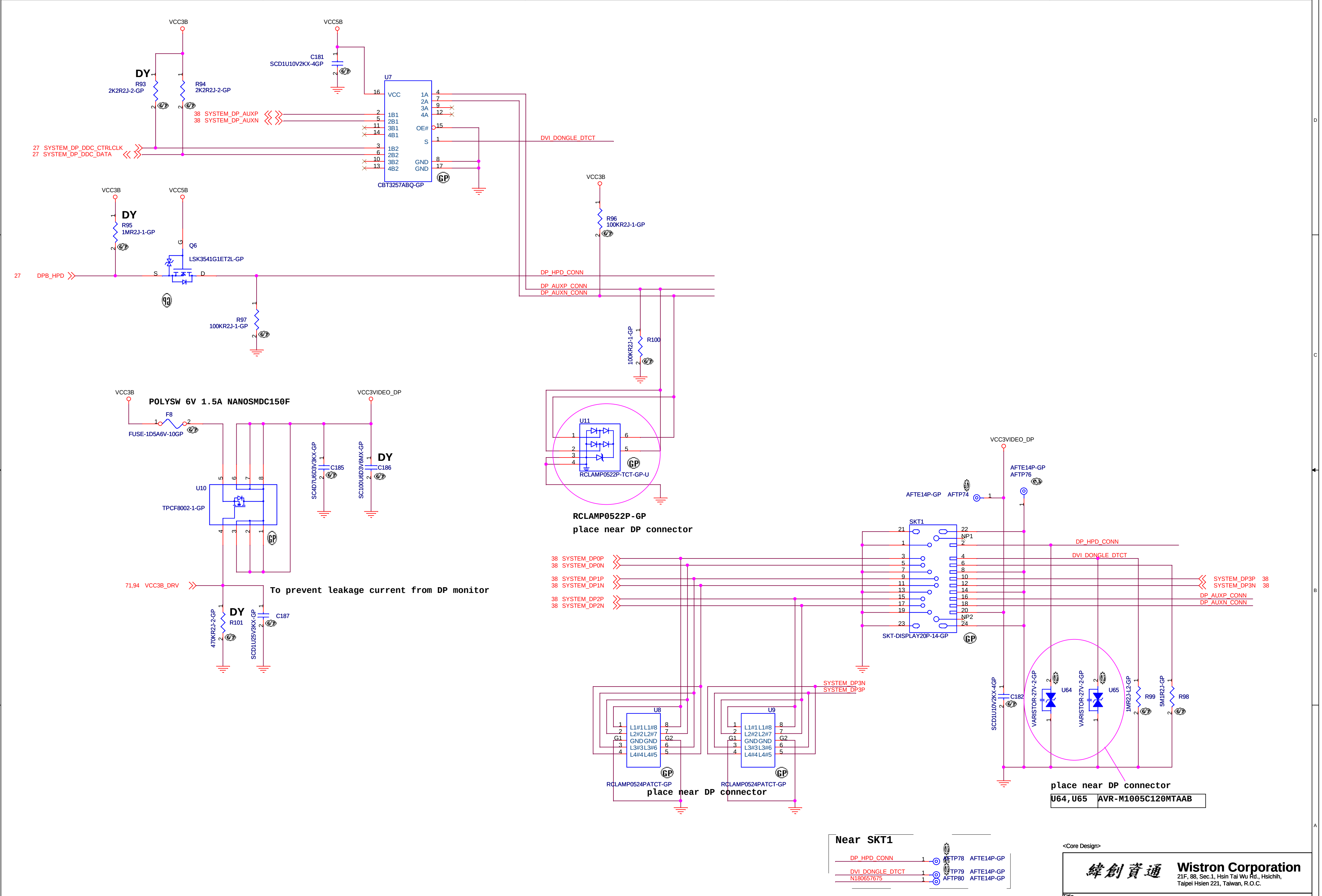
VCC3B
VCC5B
DY
R93
2K2R2J-2-GP
R94
2K2R2J-2-GP
C181
SCD1U10V2KX-4GP
U7
VCC
1A
2A
3A
4A
1B1
2B1
3B1
4B1
OE#
S
1B2
2B2
3B2
4B2
GND
GND
CBT3257ABQ-GP
38 SYSTEM_DP_AUXP
38 SYSTEM_DP_AUXN
27 SYSTEM_DP_DDC_CTRLCLK
27 SYSTEM_DP_DDC_DATA
DVI_DONGLE_DTCT
R95
1MR2J-1-GP
Q6
LSK3541G1ET2L-GP
27 DPB_HPD
DP_HPD_CONN
DP_AUXP_CONN
DP_AUXN_CONN
R96
100KR2J-1-GP
R97
100KR2J-1-GP
R100
100KR2J-1-GP
U11
RCLAMP0522P-TCT-GP-U
RCLAMP0522P-GP
place near DP connector
POLYSW 6V 1.5A NANOSMDC150F
F8
FUSE-1D5A6V-10GP
VCC3VIDEO_DP
C185
SC4D7U6D3V3KX-GP
C186
SC100U6D3V6MX-GP
U10
TPCF8002-1-GP
71,94 VCC3B_DRV
To prevent leakage current from DP monitor
R101
470KR2J-2-GP
C187
SCD1U25V3KX-GP
AFTE14P-GP
AFTP76
AFTP74
SKT1
SKT-DISPLAY20P-14-GP
38 SYSTEM_DP0P
38 SYSTEM_DP0N
38 SYSTEM_DP1P
38 SYSTEM_DP1N
38 SYSTEM_DP2P
38 SYSTEM_DP2N
SYSTEM_DP3P 38
SYSTEM_DP3N 38
SYSTEM_DP3N
SYSTEM_DP3P
U8
U9
L1#1 L1#8
L2#2 L2#7
GND GND
L3#3 L3#6
L4#4 L4#5
RCLAMP0524PATCT-GP
place near DP connector
C182
SCD1U10V2KX-4GP
U64
U65
VARISTOR-27V-2-GP
R99
1MR2J-L2-GP
R98
5M1R2J-GP
place near DP connector
U64,U65 AVR-M1005C120MTAAB
Near SKT1
DP_HPD_CONN
DVI_DONGLE_DTCT
N180657675
AFTP78 AFTE14P-GP
AFTP79 AFTE14P-GP
AFTP80 AFTE14P-GP
GP

<Core Design>

緯創資通 **Wistron Corporation**
21F, 88, Sec.1, Hsin Tai Wu Rd., Hsichih,
Taipei Hsien 221, Taiwan, R.O.C.

Title
Display Port Connector

Size Custom
Document Number **Dasher-2**
Rev -1

Date: Friday, March 09, 2012 Sheet 37 of 101

System DP Connector

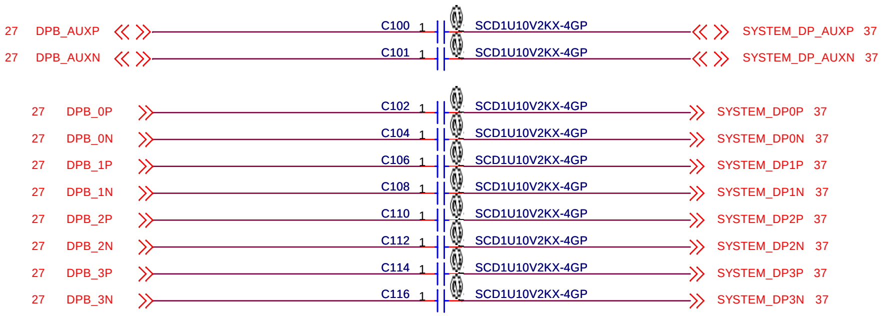
27 DPB_AUXP — C100 1 SCD1U10V2KX-4GP — SYSTEM_DP_AUXP 37
27 DPB_AUXN — C101 1 SCD1U10V2KX-4GP — SYSTEM_DP_AUXN 37
27 DPB_0P — C102 1 SCD1U10V2KX-4GP — SYSTEM_DP0P 37
27 DPB_0N — C104 1 SCD1U10V2KX-4GP — SYSTEM_DP0N 37
27 DPB_1P — C106 1 SCD1U10V2KX-4GP — SYSTEM_DP1P 37
27 DPB_1N — C108 1 SCD1U10V2KX-4GP — SYSTEM_DP1N 37
27 DPB_2P — C110 1 SCD1U10V2KX-4GP — SYSTEM_DP2P 37
27 DPB_2N — C112 1 SCD1U10V2KX-4GP — SYSTEM_DP2N 37
27 DPB_3P — C114 1 SCD1U10V2KX-4GP — SYSTEM_DP3P 37
27 DPB_3N — C116 1 SCD1U10V2KX-4GP — SYSTEM_DP3N 37

Docking DP Connector A

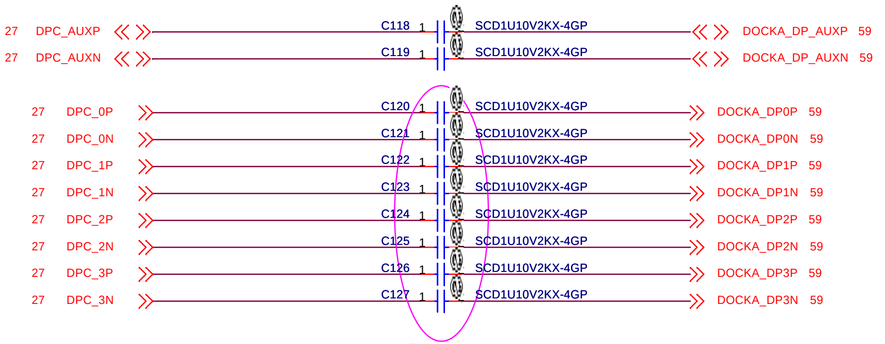
27 DPC_AUXP — C118 1 SCD1U10V2KX-4GP — DOCKA_DP_AUXP 59
27 DPC_AUXN — C119 1 SCD1U10V2KX-4GP — DOCKA_DP_AUXN 59
27 DPC_0P — C120 1 SCD1U10V2KX-4GP — DOCKA_DP0P 59
27 DPC_0N — C121 1 SCD1U10V2KX-4GP — DOCKA_DP0N 59
27 DPC_1P — C122 1 SCD1U10V2KX-4GP — DOCKA_DP1P 59
27 DPC_1N — C123 1 SCD1U10V2KX-4GP — DOCKA_DP1N 59
27 DPC_2P — C124 1 SCD1U10V2KX-4GP — DOCKA_DP2P 59
27 DPC_2N — C125 1 SCD1U10V2KX-4GP — DOCKA_DP2N 59
27 DPC_3P — C126 1 SCD1U10V2KX-4GP — DOCKA_DP3P 59
27 DPC_3N — C127 1 SCD1U10V2KX-4GP — DOCKA_DP3N 59

Place Near Docking Connector

Docking DP Connector B

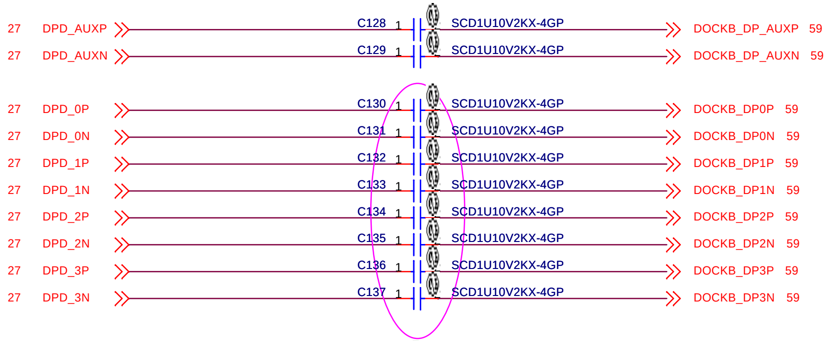
27 DPD_AUXP — C128 1 SCD1U10V2KX-4GP — DOCKB_DP_AUXP 59
27 DPD_AUXN — C129 1 SCD1U10V2KX-4GP — DOCKB_DP_AUXN 59
27 DPD_0P — C130 1 SCD1U10V2KX-4GP — DOCKB_DP0P 59
27 DPD_0N — C131 1 SCD1U10V2KX-4GP — DOCKB_DP0N 59
27 DPD_1P — C132 1 SCD1U10V2KX-4GP — DOCKB_DP1P 59
27 DPD_1N — C133 1 SCD1U10V2KX-4GP — DOCKB_DP1N 59
27 DPD_2P — C134 1 SCD1U10V2KX-4GP — DOCKB_DP2P 59
27 DPD_2N — C135 1 SCD1U10V2KX-4GP — DOCKB_DP2N 59
27 DPD_3P — C136 1 SCD1U10V2KX-4GP — DOCKB_DP3P 59
27 DPD_3N — C137 1 SCD1U10V2KX-4GP — DOCKB_DP3N 59

Place Near Docking Connector

<Core Design>

緯創資通 **Wistron Corporation**
21F, 88, Sec.1, Hsin Tai Wu Rd., Hsichih,
Taipei Hsien 221, Taiwan, R.O.C.

Title
Display Port AC Coupling

Size	Document Number	Rev
A3	**Dasher-2**	-1

Date: Friday, March 09, 2012 Sheet 38 of 101

B
L
A
N
K

<Core Design>

緯創資通 **Wistron Corporation**

21F, 88, Sec.1, Hsin Tai Wu Rd., Hsichih,
Taipei Hsien 221, Taiwan, R.O.C.

Title ***BLANK***		
Size A3	Document Number **Dasher-2**	Rev **-1**
Date: Tuesday, February 21, 2012	Sheet 39 of 101	

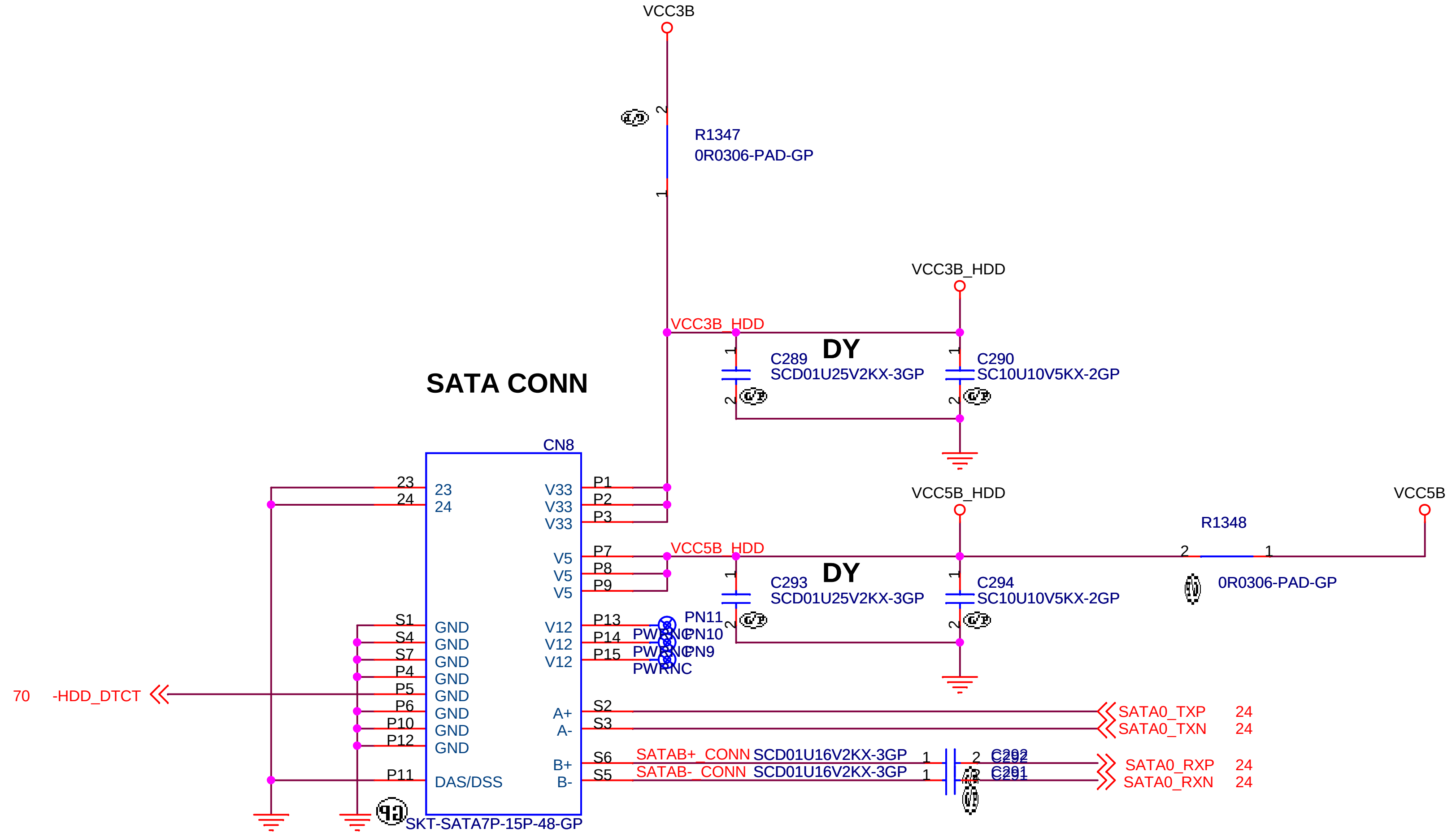
VCC3B
R1347
0R0306-PAD-GP
VCC3B_HDD
VCC3B_HDD
DY
C289
SCD01U25V2KX-3GP
C290
SC10U10V5KX-2GP
SATA CONN
CN8
23
24
V33
V33
V33
P1
P2
P3
V5
V5
V5
P7
P8
P9
VCC5B_HDD
VCC5B_HDD
VCC5B
R1348
0R0306-PAD-GP
DY
C293
SCD01U25V2KX-3GP
C294
SC10U10V5KX-2GP
S1
S4
S7
P4
P5
P6
P10
P12
P11
GND
GND
GND
GND
GND
GND
GND
GND
DAS/DSS
V12
V12
V12
P13
P14
P15
PN11
PN10
PN9
PWRNC
PWRNC
PWRNC
70
-HDD_DTCT
A+
A-
B+
B-
S2
S3
S6
S5
SATA0_TXP 24
SATA0_TXN 24
SATAB+_CONN
SATAB-_CONN
SCD01U16V2KX-3GP
SCD01U16V2KX-3GP
C292
C291
SATA0_RXP 24
SATA0_RXN 24
SKT-SATA7P-15P-48-GP

<Core Design>

緯創資通

Wistron Corporation

21F, 88, Sec.1, Hsin Tai Wu Rd., Hsichih,
Taipei Hsien 221, Taiwan, R.O.C.

Title

SATA Connector

Size A4
Document Number **Dasher-2**
Rev **-1**

Date: Friday, March 09, 2012
Sheet 40 of 101

B
L
A
N
K

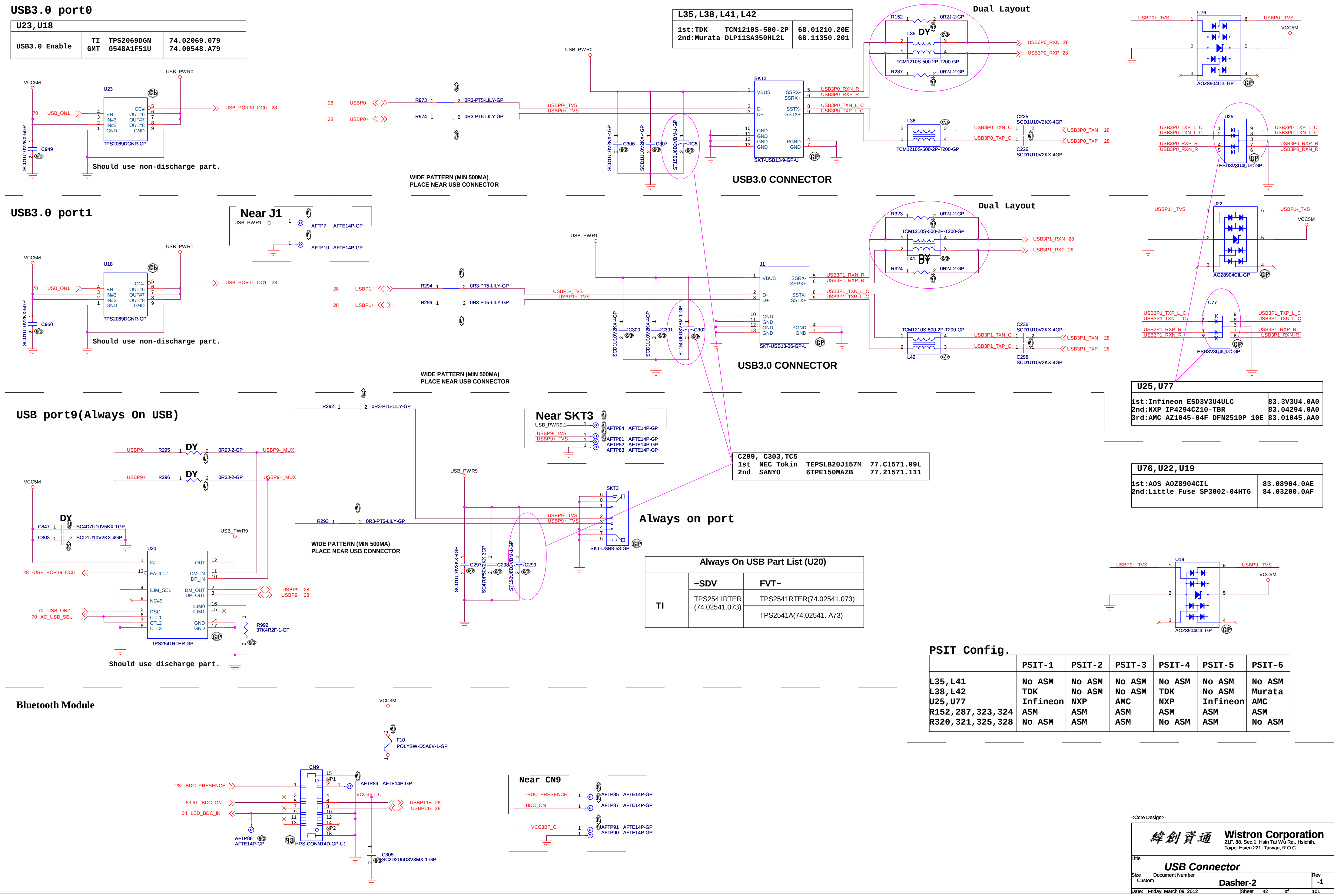
USB3.0 port0
U23,U18
USB3.0 Enable
TI TPS2069DGN
GMT G548A1F51U
74.02069.079
74.00548.A79
VCC5M
USB_PWR0
U23
70 USB_ON1
EN
IN#3
IN#2
GND
OC#
OUT#6
OUT#7
OUT#8
GND
-USB_PORT0_OC0 28
TPS2069DGNR-GP
C949
SCD1U10V2KX-5GP
Should use non-discharge part.
USBP0- 28
USBP0+ 28
R973 0R3-PT5-LILY-GP
R974 0R3-PT5-LILY-GP
USBP0- TVS
USBP0+ TVS
WIDE PATTERN (MIN 500MA)
PLACE NEAR USB CONNECTOR
C306 SCD1U10V2KX-4GP
C307 SCD1U10V2KX-4GP
TC5 ST150U6D3VBM-1-GP
SKT2
VBUS
D-
D+
GND
SSRX-
SSRX+
SSTX-
SSTX+
PGND
SKT-USB13-9-GP-U
USB3.0 CONNECTOR
L35,L38,L41,L42
1st:TDK TCM1210S-500-2P 68.01210.20E
2nd:Murata DLP11SA350HL2L 68.11350.201
Dual Layout
R152 0R2J-2-GP
R287 0R2J-2-GP
L35 DY
TCM1210S-500-2P-T200-GP
USB3P0_RXN 28
USB3P0_RXP 28
USB3P0_RXN_R
USB3P0_RXP_R
USB3P0_TXN_L_C
USB3P0_TXP_L_C
L38
C225 SCD1U10V2KX-4GP
C226 SCD1U10V2KX-4GP
USB3P0_TXN_C
USB3P0_TXP_C
USB3P0_TXN 28
USB3P0_TXP 28
U76
USBP0+ TVS
USBP0- TVS
VCC5M
AOZ8904CIL-GP
U25
USB3P0_TXP_L_C
USB3P0_TXN_L_C
USB3P0_RXP_R
USB3P0_RXN_R
ESD3V3U4ULC-GP
USB3.0 port1
Near J1
USB_PWR1
AFTP7 AFTE14P-GP
AFTP10 AFTE14P-GP
U18
-USB_PORT1_OC1 28
TPS2069DGNR-GP
C950
USBP1- 28
USBP1+ 28
R294 0R3-PT5-LILY-GP
R299 0R3-PT5-LILY-GP
USBP1- TVS
USBP1+ TVS
J1
C300 SCD1U10V2KX-4GP
C301 SCD1U10V2KX-4GP
C302 ST150U6D3VBM-1-GP
SKT-USB13-36-GP-U
R323 0R2J-2-GP
R324 0R2J-2-GP
L41 DY
USB3P1_RXN 28
USB3P1_RXP 28
USB3P1_RXN_R
USB3P1_RXP_R
USB3P1_TXN_L_C
USB3P1_TXP_L_C
L42
C236 SCD1U10V2KX-4GP
C296 SCD1U10V2KX-4GP
USB3P1_TXN_C
USB3P1_TXP_C
USB3P1_TXN 28
USB3P1_TXP 28
U22
USBP1+ TVS
USBP1- TVS
U77
USB port9(Always On USB)
R292 0R3-PT5-LILY-GP
USBP9-
R295 DY 0R2J-2-GP
USBP9- MUX
USBP9+
R296 DY 0R2J-2-GP
USBP9+ MUX
Near SKT3
USB_PWR9
USBP9- TVS
USBP9+ TVS
AFTP84 AFTE14P-GP
AFTP81 AFTE14P-GP
AFTP82 AFTE14P-GP
AFTP83 AFTE14P-GP
C847 SC4D7U10V5KX-1GP
C303 SCD1U10V2KX-4GP
U20
IN
OUT
FAULT#
DM_IN
DP_IN
ILIM_SEL
NC#9
DSC
CTL1
CTL2
CTL3
DM_OUT
DP_OUT
ILIM0
ILIM1
GND
28 -USB_PORT9_OC5
70 USB_ON2
70 AO_USB_SEL
USBP9- 28
USBP9+ 28
R992 37K4R2F-1-GP
TPS2541RTER-GP
Should use discharge part.
R293 0R3-PT5-LILY-GP
WIDE PATTERN (MIN 500MA)
PLACE NEAR USB CONNECTOR
C297 SCD1U10V2KX-4GP
C298 SC470P50V2KX-3GP
C299 ST150U6D3VBM-1-GP
SKT3
SKT-USB8-53-GP
Always on port
U19
USBP9+ TVS
USBP9- TVS
Bluetooth Module
VCC3M
F10 POLYSW-D5A6V-1-GP
CN9
28 -BDC_PRESENCE
53,61 BDC_ON
34 LED_BDC_IN
AFTP88 AFTE14P-GP
AFTP89 AFTE14P-GP
VCC3BT_C
USBP11+ 28
USBP11- 28
HRS-CONN14D-GP-U1
C305 SC2D2U6D3V3MX-1-GP
Near CN9
-BDC_PRESENCE
BDC_ON
VCC3BT_C
AFTP85 AFTE14P-GP
AFTP87 AFTE14P-GP
AFTP91 AFTE14P-GP
AFTP90 AFTE14P-GP

U23,U18

USB3.0 Enable	TI TPS2069DGN GMT G548A1F51U	74.02069.079 74.00548.A79

L35,L38,L41,L42

1st:TDK	TCM1210S-500-2P	68.01210.20E
2nd:Murata	DLP11SA350HL2L	68.11350.201

U25,U77

1st:Infineon ESD3V3U4ULC	83.3V3U4.0A0
2nd:NXP IP4294CZ10-TBR	83.04294.0A0
3rd:AMC AZ1045-04F DFN2510P 10E	83.01045.AA0

C299, C303, TC5

1st	NEC Tokin	TEPSLB20J157M	77.C1571.09L
2nd	SANYO	6TPE150MAZB	77.21571.111

U76,U22,U19

1st:AOS AOZ8904CIL	83.08904.0AE
2nd:Little Fuse SP3002-04HTG	84.03200.0AF

Always On USB Part List (U20)

	~SDV	FVT~
TI	TPS2541RTER (74.02541.073)	TPS2541RTER(74.02541.073)
		TPS2541A(74.02541. A73)

PSIT Config.

	PSIT-1	PSIT-2	PSIT-3	PSIT-4	PSIT-5	PSIT-6
L35,L41	No ASM	No ASM	No ASM	No ASM	No ASM	No ASM
L38,L42	TDK	No ASM	No ASM	TDK	No ASM	Murata
U25,U77	Infineon	NXP	AMC	NXP	Infineon	AMC
R152,287,323,324	ASM	ASM	ASM	ASM	ASM	ASM
R320,321,325,328	No ASM	ASM	ASM	No ASM	ASM	No ASM

<Core Design>

緯創資通 **Wistron Corporation**
21F, 88, Sec.1, Hsin Tai Wu Rd., Hsichih,
Taipei Hsien 221, Taiwan, R.O.C.

Title	USB Connector	
Size Custom	Document Number Dasher-2	Rev -1
Date: Friday, March 09, 2012	Sheet 42 of 101	

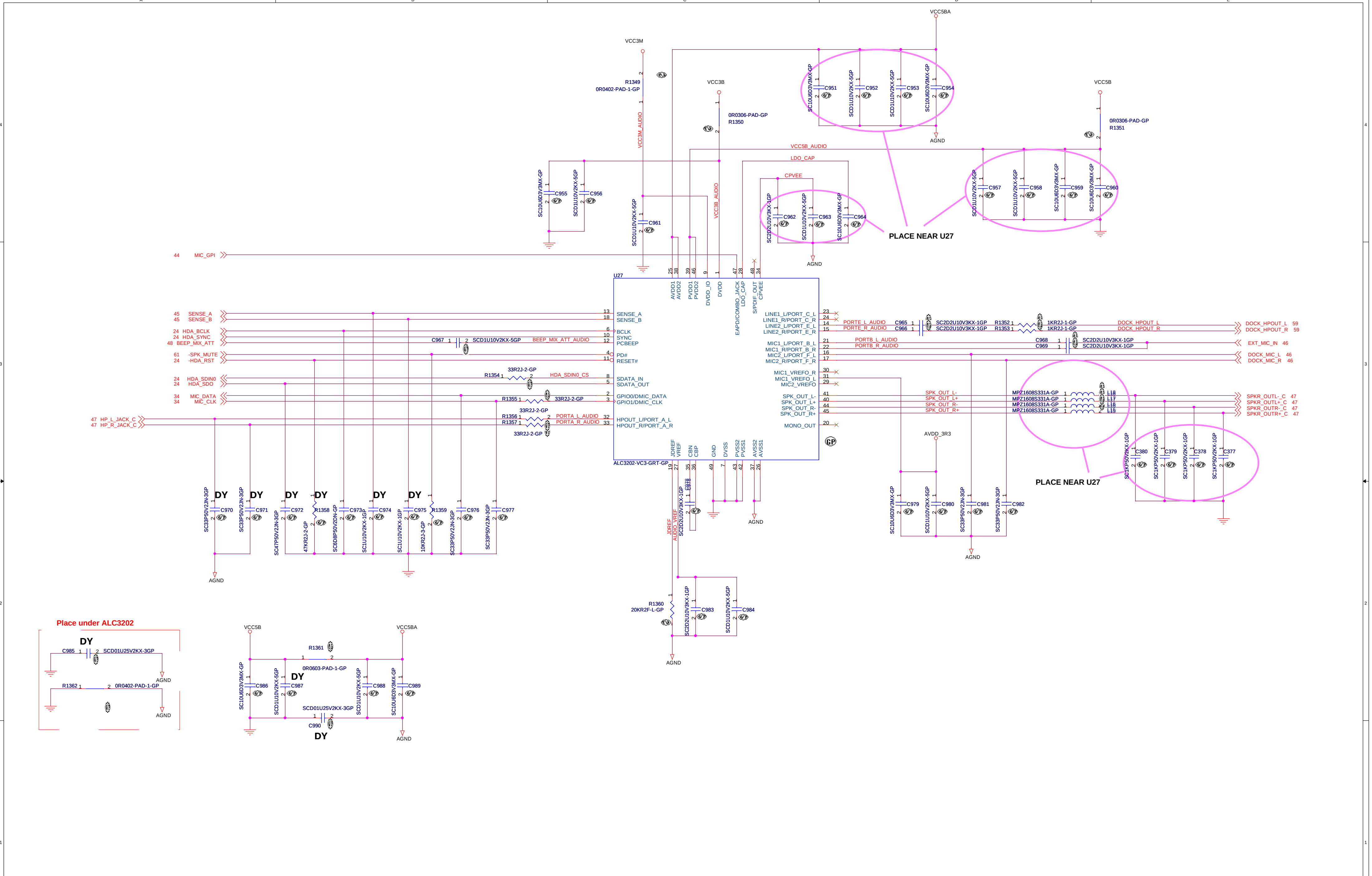
VCC5BA
VCC3M
R1349
0R0402-PAD-1-GP
VCC3M_AUDIO
VCC3B
0R0306-PAD-GP
R1350
VCC3B_AUDIO
VCC5B
0R0306-PAD-GP
R1351
VCC5B_AUDIO
LDO_CAP
CPVEE
C951
C952
C953
C954
SC10U6D3V3MX-GP
SCD1U10V2KX-5GP
AGND
C955
C956
C957
C958
C959
C960
C961
C962
C963
C964
SC2D2U10V3KX-1GP
PLACE NEAR U27
44 MIC_GPI
U27
AVDD1
AVDD2
PVDD1
PVDD2
DVDD_IO
DVDD
EAPD/COMBO_JACK
LDO_CAP
SPDIF_OUT
CPVEE
45 SENSE_A
45 SENSE_B
24 HDA_BCLK
24 HDA_SYNC
48 BEEP_MIX_ATT
61 -SPK_MUTE
24 -HDA_RST
24 HDA_SDIN0
24 HDA_SDO
34 MIC_DATA
34 MIC_CLK
47 HP_L_JACK_C
47 HP_R_JACK_C
SENSE_A
SENSE_B
BCLK
SYNC
PCBEEP
PD#
RESET#
SDATA_IN
SDATA_OUT
GPIO0/DMIC_DATA
GPIO1/DMIC_CLK
HPOUT_L/PORT_A_L
HPOUT_R/PORT_A_R
C967
SCD1U10V2KX-5GP
BEEP_MIX_ATT_AUDIO
R1354
33R2J-2-GP
HDA_SDIN0_CS
R1355
R1356
R1357
PORTA_L_AUDIO
PORTA_R_AUDIO
LINE1_L/PORT_C_L
LINE1_R/PORT_C_R
LINE2_L/PORT_E_L
LINE2_R/PORT_E_R
MIC1_L/PORT_B_L
MIC1_R/PORT_B_R
MIC2_L/PORT_F_L
MIC2_R/PORT_F_R
MIC1_VREFO_R
MIC1_VREFO_L
MIC2_VREFO
SPK_OUT_L-
SPK_OUT_L+
SPK_OUT_R-
SPK_OUT_R+
MONO_OUT
PORTE_L_AUDIO
PORTE_R_AUDIO
C965
C966
SC2D2U10V3KX-1GP
R1352
R1353
1KR2J-1-GP
DOCK_HPOUT_L
DOCK_HPOUT_R
DOCK_HPOUT_L 59
DOCK_HPOUT_R 59
PORTB_L_AUDIO
PORTB_R_AUDIO
C968
C969
EXT_MIC_IN 46
DOCK_MIC_L 46
DOCK_MIC_R 46
MPZ1608S331A-GP
L15
L16
L17
L18
SPKR_OUTL-_C 47
SPKR_OUTL+_C 47
SPKR_OUTR-_C 47
SPKR_OUTR+_C 47
AVDD_3R3
JDREF
VREF
CBN
CBP
GND
DVSS
PVSS2
PVSS1
AVSS2
AVSS1
ALC3202-VC3-GRT-GP
C970
C971
C972
C973
C974
C975
C976
C977
C978
R1358
R1359
47KR2J-2-GP
10KR2J-3-GP
SC33P50V2JN-3GP
SC47P50V2JN-3GP
SC6D8P50V2DN-GP
SC1U10V2KX-1GP
DY
C979
C980
C981
C982
C377
C378
C379
C380
SC1KP50V2KX-1GP
PLACE NEAR U27
JDREF
AUDIO_VREF
R1360
20KR2F-L-GP
C983
C984
Place under ALC3202
C985
SCD01U25V2KX-3GP
R1362
0R0402-PAD-1-GP
R1361
0R0603-PAD-1-GP
C986
C987
C988
C989
C990
VCC5B
VCC5BA
A
B
C
D
E
1
2
3
4

<Core Design>

緯創資通 Wistron Corporation
21F, 88, Sec.1, Hsin Tai Wu Rd., Hsichih,
Taipei Hsien 221, Taiwan, R.O.C.

Title
AUDIO ALC3202

Size	Document Number	Rev
A2	Dasher-2	-1

Date: Friday, March 09, 2012 Sheet 43 of 101

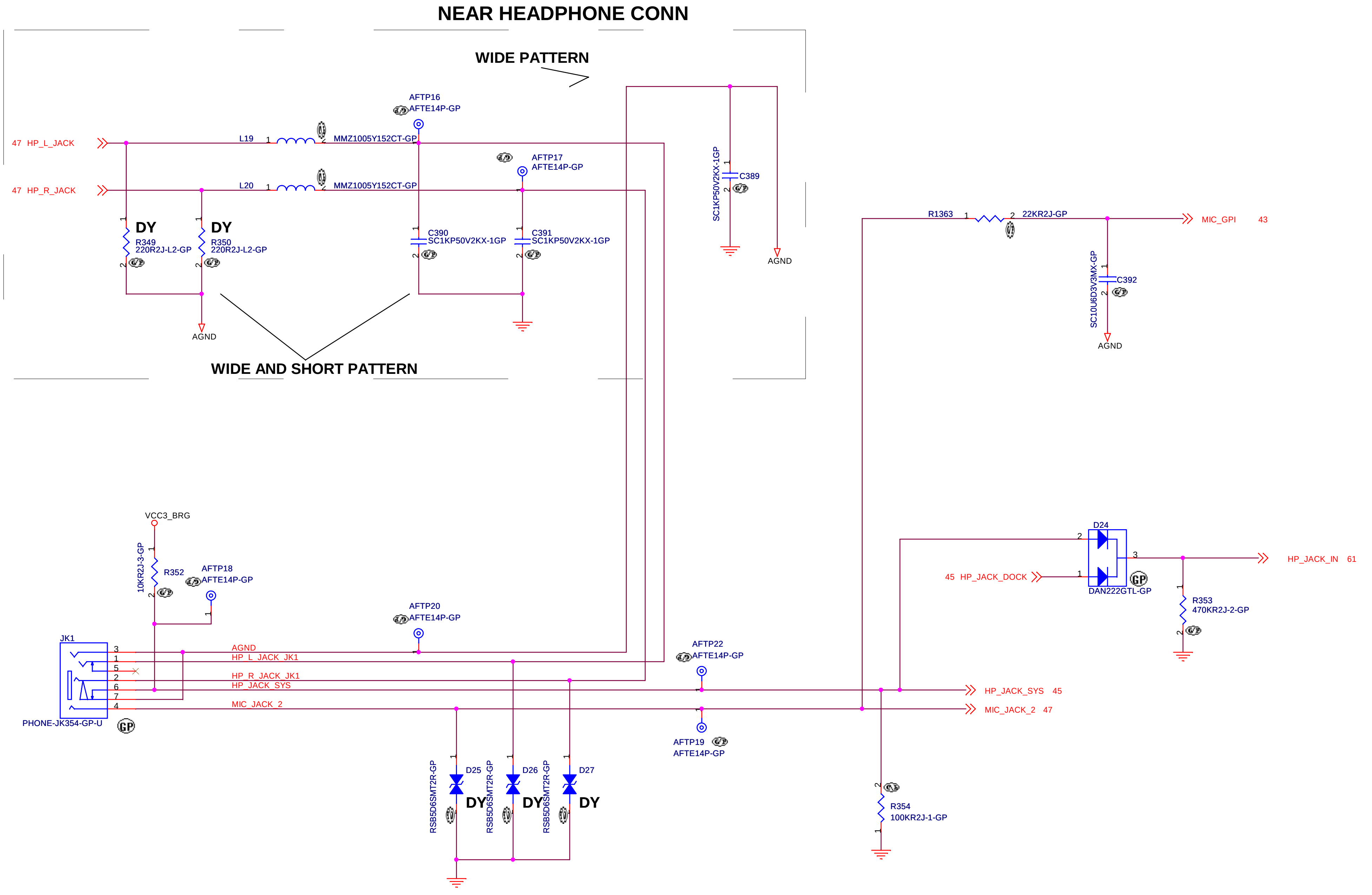
NEAR HEADPHONE CONN
WIDE PATTERN
WIDE AND SHORT PATTERN
47 HP_L_JACK
47 HP_R_JACK
L19
L20
MMZ1005Y152CT-GP
MMZ1005Y152CT-GP
AFTP16
AFTE14P-GP
AFTP17
AFTE14P-GP
DY
R349
220R2J-L2-GP
DY
R350
220R2J-L2-GP
C390
SC1KP50V2KX-1GP
C391
SC1KP50V2KX-1GP
AGND
SC1KP50V2KX-1GP
C389
AGND
R1363
22KR2J-GP
MIC_GPI 43
SC10U6D3V3MX-GP
C392
AGND
VCC3_BRG
10KR2J-3-GP
R352
AFTP18
AFTE14P-GP
AFTP20
AFTE14P-GP
JK1
PHONE-JK354-GP-U
AGND
HP_L_JACK_JK1
HP_R_JACK_JK1
HP_JACK_SYS
MIC_JACK_2
D24
45 HP_JACK_DOCK
DAN222GTL-GP
HP_JACK_IN 61
R353
470KR2J-2-GP
AFTP22
AFTE14P-GP
HP_JACK_SYS 45
MIC_JACK_2 47
AFTP19
AFTE14P-GP
D25
D26
D27
RSB5D6SMT2R-GP
RSB5D6SMT2R-GP
RSB5D6SMT2R-GP
DY
DY
DY
R354
100KR2J-1-GP

<Core Design>

緯創資通 **Wistron Corporation**
21F, 88, Sec.1, Hsin Tai Wu Rd., Hsichih,
Taipei Hsien 221, Taiwan, R.O.C.

Title
Audio Connector

Size	Document Number	Rev
A3	Dasher-2	-1

Date: Friday, March 09, 2012 Sheet 44 of 101

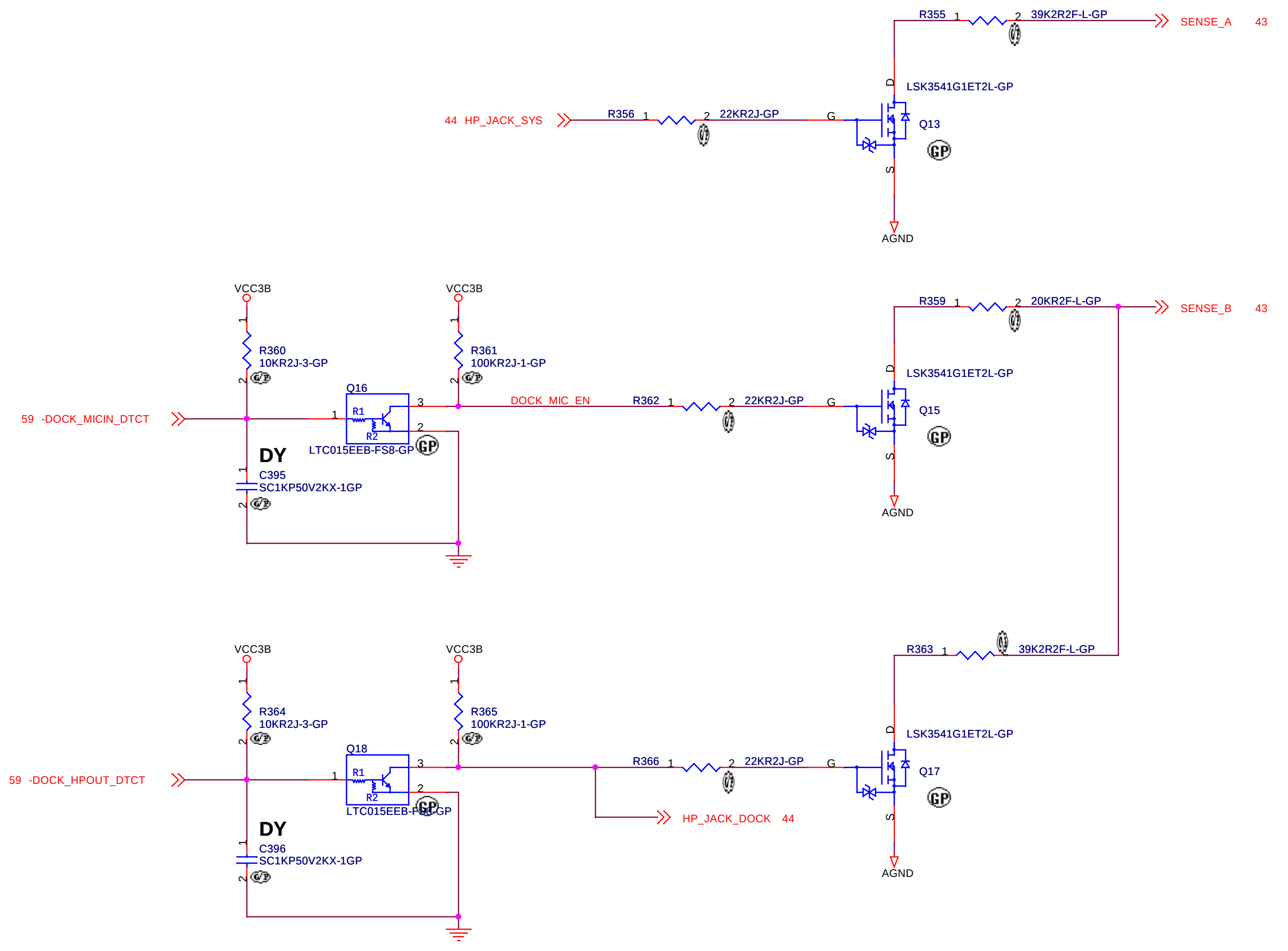
R355
1
2
39K2R2F-L-GP
SENSE_A
43
LSK3541G1ET2L-GP
D
G
S
Q13
44
HP_JACK_SYS
R356
1
2
22KR2J-GP
AGND
VCC3B
VCC3B
R359
1
2
20KR2F-L-GP
SENSE_B
43
R360
10KR2J-3-GP
R361
100KR2J-1-GP
Q16
R1
R2
3
2
1
59
-DOCK_MICIN_DTCT
DOCK_MIC_EN
R362
1
2
22KR2J-GP
G
D
S
LSK3541G1ET2L-GP
Q15
LTC015EEB-FS8-GP
DY
C395
SC1KP50V2KX-1GP
AGND
VCC3B
VCC3B
R363
1
39K2R2F-L-GP
R364
10KR2J-3-GP
R365
100KR2J-1-GP
Q18
R1
R2
3
2
1
59
-DOCK_HPOUT_DTCT
R366
1
2
22KR2J-GP
G
D
S
LSK3541G1ET2L-GP
Q17
HP_JACK_DOCK
44
LTC015EEB-FS8-GP
DY
C396
SC1KP50V2KX-1GP
AGND

<Core Design>

緯創資通 **Wistron Corporation**
21F, 88, Sec.1, Hsin Tai Wu Rd., Hsichih,
Taipei Hsien 221, Taiwan, R.O.C.

Title
Audio Jack Sense

Size A3
Document Number **Dasher-2**
Rev **-1**

Date: Friday, March 09, 2012
Sheet 45 of 101

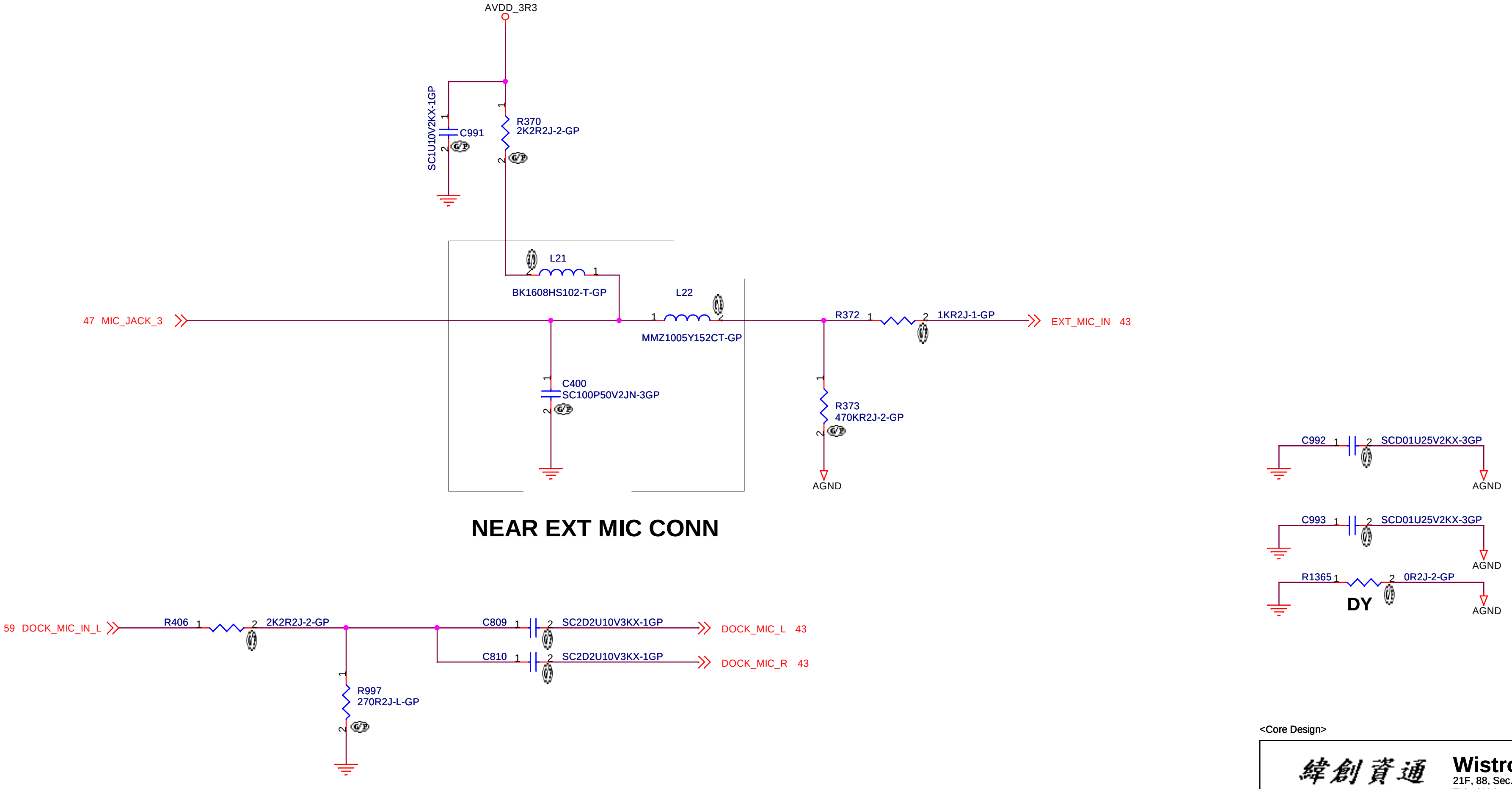
AVDD_3R3
SC1U10V2KX-1GP
C991
R370
2K2R2J-2-GP
L21
BK1608HS102-T-GP
L22
MMZ1005Y152CT-GP
47 MIC_JACK_3
R372
1KR2J-1-GP
EXT_MIC_IN 43
C400
SC100P50V2JN-3GP
R373
470KR2J-2-GP
AGND
NEAR EXT MIC CONN
C992
SCD01U25V2KX-3GP
AGND
C993
SCD01U25V2KX-3GP
AGND
R1365
0R2J-2-GP
DY
AGND
59 DOCK_MIC_IN_L
R406
2K2R2J-2-GP
C809
SC2D2U10V3KX-1GP
DOCK_MIC_L 43
C810
SC2D2U10V3KX-1GP
DOCK_MIC_R 43
R997
270R2J-L-GP

<Core Design>

緯創資通 **Wistron Corporation**
21F, 88, Sec.1, Hsin Tai Wu Rd., Hsichih,
Taipei Hsien 221, Taiwan, R.O.C.

Title **Audio Ext MIC I/F**

Size	Document Number	Rev
A3	Dasher-2	-1

Date: Friday, March 09, 2012 Sheet 46 of 101

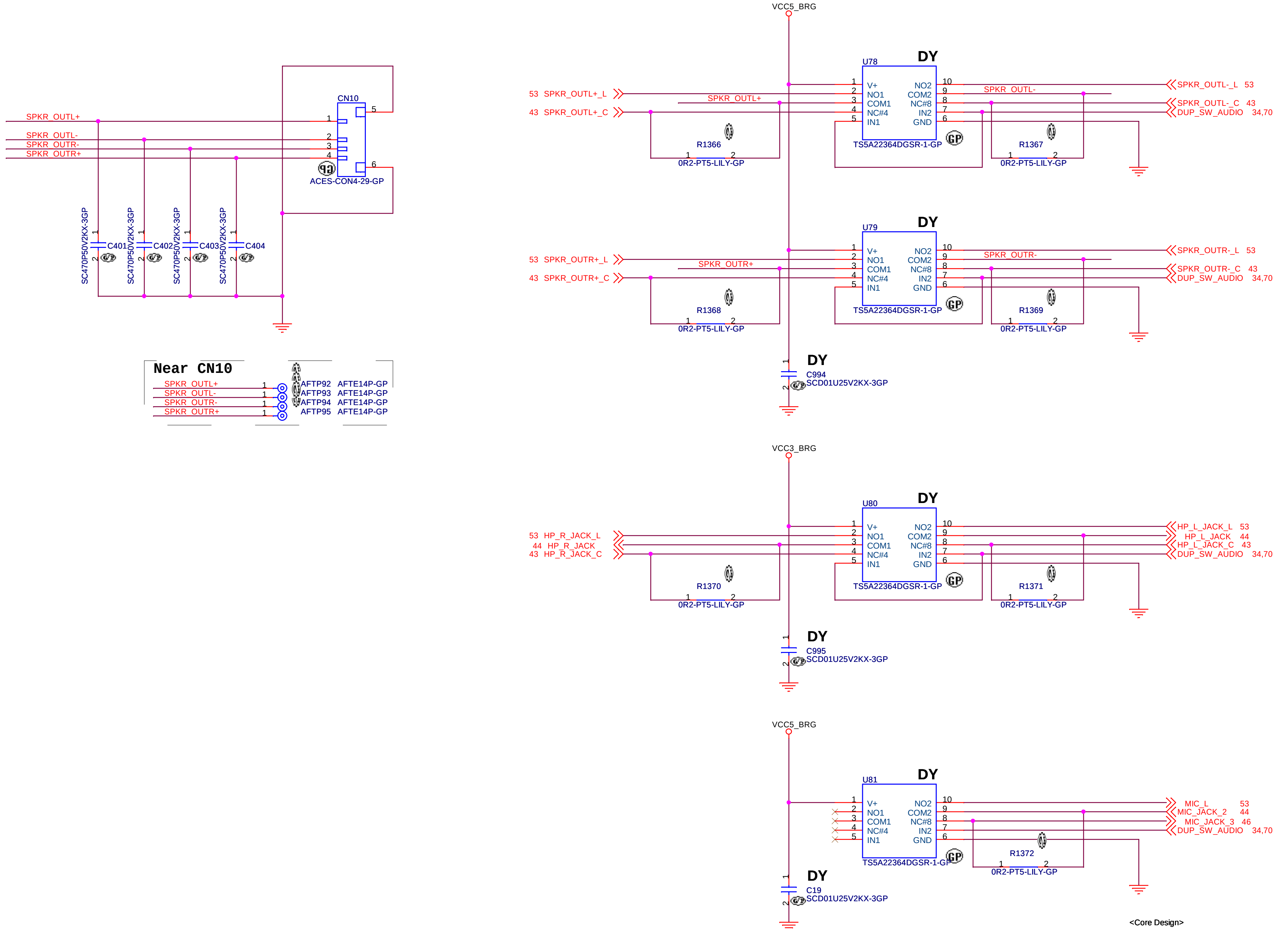
CN10
ACES-CON4-29-GP
SPKR_OUTL+
SPKR_OUTL-
SPKR_OUTR-
SPKR_OUTR+
C401
C402
C403
C404
SC470P50V2KX-3GP
Near CN10
AFTP92 AFTE14P-GP
AFTP93 AFTE14P-GP
AFTP94 AFTE14P-GP
AFTP95 AFTE14P-GP
VCC5_BRG
U78
DY
V+
NO1
COM1
NC#4
IN1
NO2
COM2
NC#8
IN2
GND
TS5A22364DGSR-1-GP
53 SPKR_OUTL+_L
43 SPKR_OUTL+_C
SPKR_OUTL-_L 53
SPKR_OUTL-_C 43
DUP_SW_AUDIO 34,70
R1366
R1367
0R2-PT5-LILY-GP
U79
53 SPKR_OUTR+_L
43 SPKR_OUTR+_C
SPKR_OUTR-_L 53
SPKR_OUTR-_C 43
DUP_SW_AUDIO 34,70
R1368
R1369
C994
SCD01U25V2KX-3GP
VCC3_BRG
U80
53 HP_R_JACK_L
44 HP_R_JACK
43 HP_R_JACK_C
HP_L_JACK_L 53
HP_L_JACK 44
HP_L_JACK_C 43
DUP_SW_AUDIO 34,70
R1370
R1371
C995
SCD01U25V2KX-3GP
VCC5_BRG
U81
MIC_L 53
MIC_JACK_2 44
MIC_JACK_3 46
DUP_SW_AUDIO 34,70
R1372
C19
SCD01U25V2KX-3GP

<Core Design>

緯創資通 **Wistron Corporation**
21F, 88, Sec.1, Hsin Tai Wu Rd., Hsichih,
Taipei Hsien 221, Taiwan, R.O.C.

Title
AUDIO SPEAKER

Size	Document Number	Rev
A3	Dasher-2	-1

Date: Friday, March 09, 2012 Sheet 47 of 101

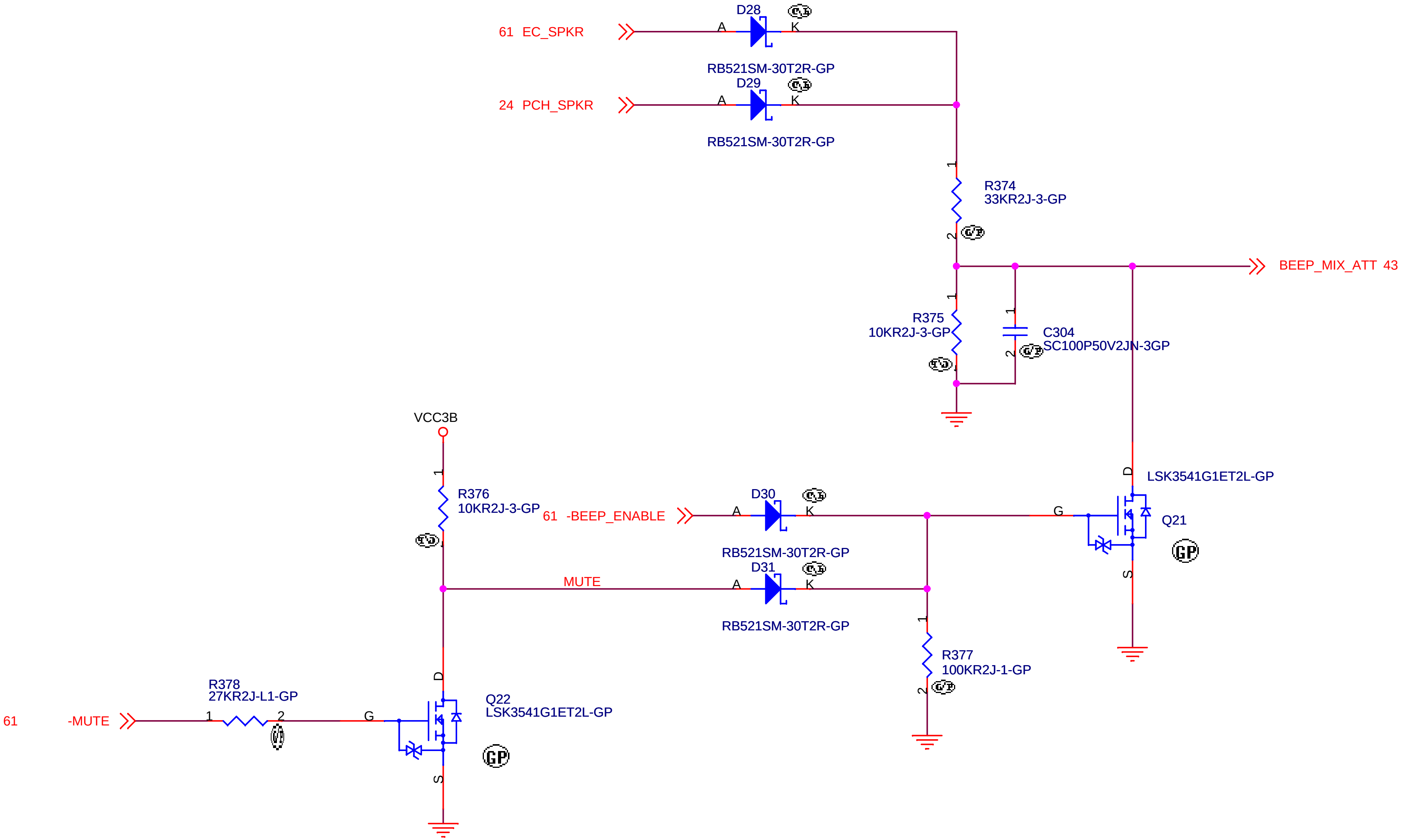
61 EC_SPKR
24 PCH_SPKR
D28
D29
A
K
RB521SM-30T2R-GP
RB521SM-30T2R-GP
R374
33KR2J-3-GP
1
2
BEEP_MIX_ATT 43
R375
10KR2J-3-GP
C304
SC100P50V2JN-3GP
VCC3B
R376
10KR2J-3-GP
61 -BEEP_ENABLE
D30
RB521SM-30T2R-GP
D31
RB521SM-30T2R-GP
MUTE
LSK3541G1ET2L-GP
Q21
G
D
S
GP
R377
100KR2J-1-GP
R378
27KR2J-L1-GP
61
-MUTE
Q22
LSK3541G1ET2L-GP
GP

<Core Design>

緯創資通 **Wistron Corporation**
21F, 88, Sec.1, Hsin Tai Wu Rd., Hsichih,
Taipei Hsien 221, Taiwan, R.O.C.

Title	*Audio BEEP*	
Size A4	Document Number **Dasher-2**	Rev **-1**
Date: Friday, March 09, 2012	Sheet 48 of 101	

AMT	YES	NO
U30	82579LM	82579V

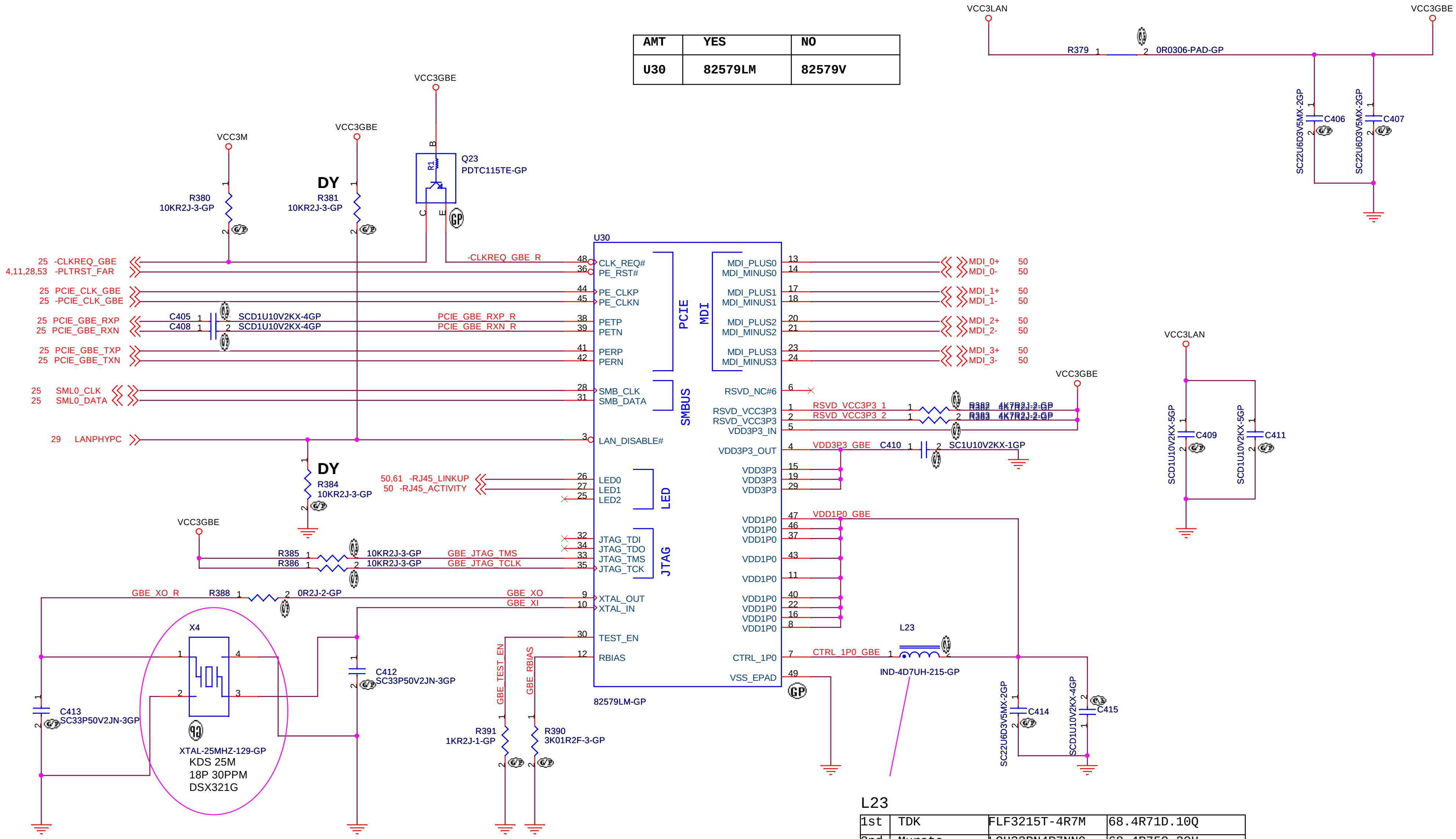

VCC3LAN
VCC3GBE
R379 1 2 0R0306-PAD-GP
C406 SC22U6D3V5MX-2GP
C407 SC22U6D3V5MX-2GP
VCC3GBE
Q23 PDTC115TE-GP
R1
B C E
VCC3GBE
VCC3M
DY
R380 10KR2J-3-GP
R381 10KR2J-3-GP
U30
25 -CLKREQ_GBE
4,11,28,53 -PLTRST_FAR
25 PCIE_CLK_GBE
25 -PCIE_CLK_GBE
25 PCIE_GBE_RXP
25 PCIE_GBE_RXN
C405 SCD1U10V2KX-4GP
C408 SCD1U10V2KX-4GP
PCIE_GBE_RXP_R
PCIE_GBE_RXN_R
-CLKREQ_GBE_R
25 PCIE_GBE_TXP
25 PCIE_GBE_TXN
25 SML0_CLK
25 SML0_DATA
29 LANPHYPC
CLK_REQ#
PE_RST#
PE_CLKP
PE_CLKN
PETP
PETN
PERP
PERN
PCIE
SMB_CLK
SMB_DATA
SMBUS
LAN_DISABLE#
LED0
LED1
LED2
LED
JTAG_TDI
JTAG_TDO
JTAG_TMS
JTAG_TCK
JTAG
XTAL_OUT
XTAL_IN
TEST_EN
RBIAS
MDI
MDI_PLUS0
MDI_MINUS0
MDI_PLUS1
MDI_MINUS1
MDI_PLUS2
MDI_MINUS2
MDI_PLUS3
MDI_MINUS3
RSVD_NC#6
RSVD_VCC3P3
RSVD_VCC3P3
VDD3P3_IN
VDD3P3_OUT
VDD3P3
VDD3P3
VDD3P3
VDD1P0
CTRL_1P0
VSS_EPAD
82579LM-GP
MDI_0+ 50
MDI_0- 50
MDI_1+ 50
MDI_1- 50
MDI_2+ 50
MDI_2- 50
MDI_3+ 50
MDI_3- 50
VCC3GBE
RSVD_VCC3P3_1
RSVD_VCC3P3_2
R382 4K7R2J-2-GP
R383 4K7R2J-2-GP
VDD3P3_GBE
C410 SC1U10V2KX-1GP
VDD1P0_GBE
VCC3LAN
C409 SCD1U10V2KX-5GP
C411 SCD1U10V2KX-5GP
DY
R384 10KR2J-3-GP
50,61 -RJ45_LINKUP
50 -RJ45_ACTIVITY
VCC3GBE
R385 10KR2J-3-GP
R386 10KR2J-3-GP
GBE_JTAG_TMS
GBE_JTAG_TCLK
GBE_XO_R
R388 0R2J-2-GP
GBE_XO
GBE_XI
X4
XTAL-25MHZ-129-GP
KDS 25M
18P 30PPM
DSX321G
C413 SC33P50V2JN-3GP
C412 SC33P50V2JN-3GP
GBE_TEST_EN
GBE_RBIAS
R391 1KR2J-1-GP
R390 3K01R2F-3-GP
L23
CTRL_1P0_GBE
IND-4D7UH-215-GP
C414 SC22U6D3V5MX-2GP
C415 SCD1U10V2KX-4GP

L23

1st	TDK	FLF3215T-4R7M	68.4R71D.10Q
2nd	Murata	LQH32PN4R7NN0	68.4R750.20H
3rd	Taiyo Yuden	BRL3225T4R7M	68.4R71E.10I

X4

1st	KDS	DSX321G 25M 18P 30PPM	82.30020.B11
2nd	H.ELE	HSX321S 25M 18P 30PPM	82.30020.B21
3rd	TXC	7V25020001 25M 18P 30PPM	41U6141AA

<Core Design>

緯創資通 **Wistron Corporation**
21F, 88, Sec.1, Hsin Tai Wu Rd., Hsichih,
Taipei Hsien 221, Taiwan, R.O.C.

Title
GBE Lewisville

Size A3
Document Number **Dasher-2**
Rev -1

Date: Friday, March 09, 2012
Sheet 49 of 101

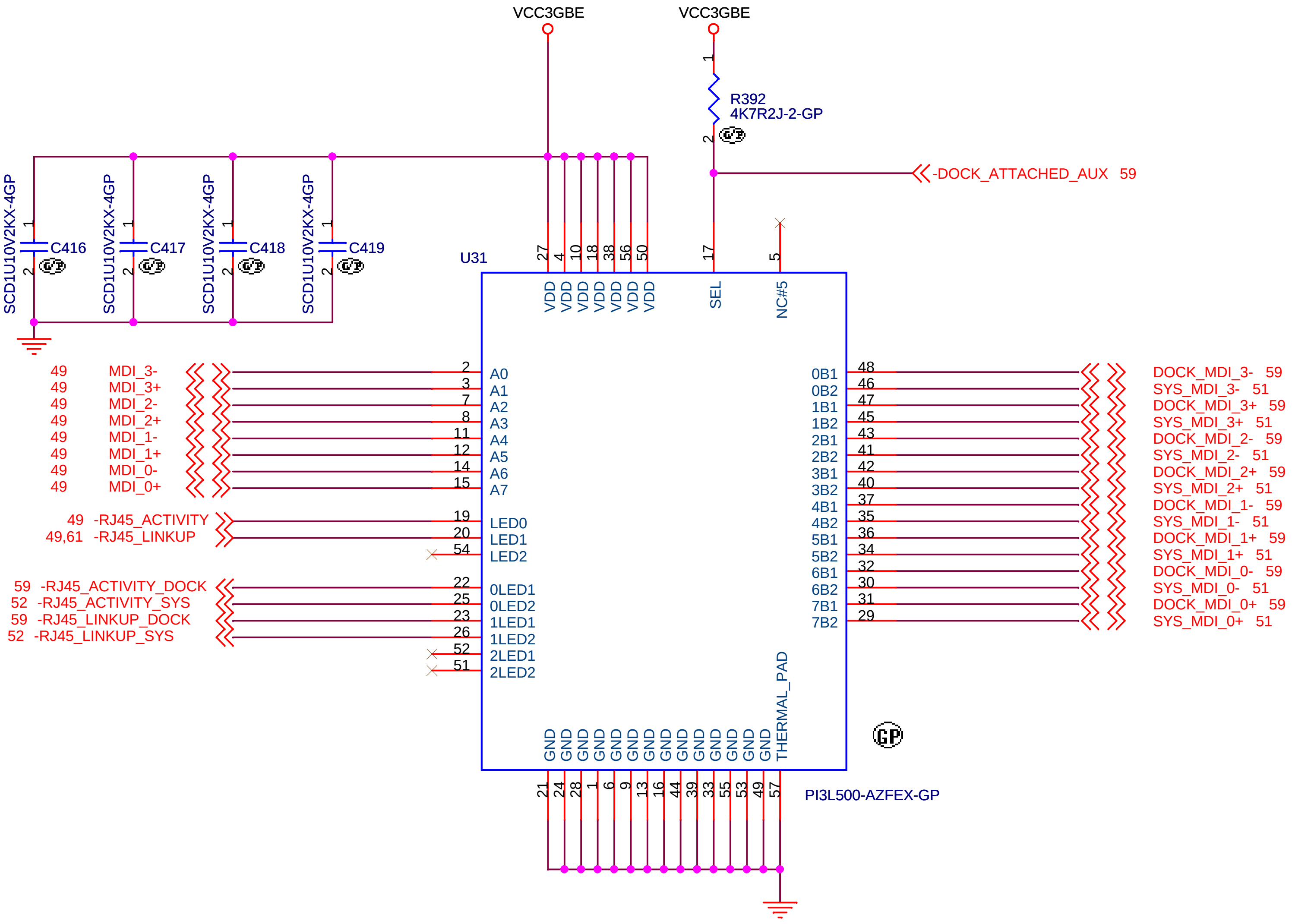
VCC3GBE
VCC3GBE
R392
4K7R2J-2-GP
-DOCK_ATTACHED_AUX 59
SCD1U10V2KX-4GP
C416
SCD1U10V2KX-4GP
C417
SCD1U10V2KX-4GP
C418
SCD1U10V2KX-4GP
C419
U31
27 4 10 18 38 56 50
VDD VDD VDD VDD VDD VDD VDD
17 SEL
5 NC#5
49 MDI_3- 2 A0
49 MDI_3+ 3 A1
49 MDI_2- 7 A2
49 MDI_2+ 8 A3
49 MDI_1- 11 A4
49 MDI_1+ 12 A5
49 MDI_0- 14 A6
49 MDI_0+ 15 A7
49 -RJ45_ACTIVITY 19 LED0
49,61 -RJ45_LINKUP 20 LED1
54 LED2
59 -RJ45_ACTIVITY_DOCK 22 0LED1
52 -RJ45_ACTIVITY_SYS 25 0LED2
59 -RJ45_LINKUP_DOCK 23 1LED1
52 -RJ45_LINKUP_SYS 26 1LED2
52 2LED1
51 2LED2
0B1 48 DOCK_MDI_3- 59
0B2 46 SYS_MDI_3- 51
1B1 47 DOCK_MDI_3+ 59
1B2 45 SYS_MDI_3+ 51
2B1 43 DOCK_MDI_2- 59
2B2 41 SYS_MDI_2- 51
3B1 42 DOCK_MDI_2+ 59
3B2 40 SYS_MDI_2+ 51
4B1 37 DOCK_MDI_1- 59
4B2 35 SYS_MDI_1- 51
5B1 36 DOCK_MDI_1+ 59
5B2 34 SYS_MDI_1+ 51
6B1 32 DOCK_MDI_0- 59
6B2 30 SYS_MDI_0- 51
7B1 31 DOCK_MDI_0+ 59
7B2 29 SYS_MDI_0+ 51
GND GND GND GND GND GND GND GND GND GND GND GND GND THERMAL_PAD
21 24 28 1 6 9 13 16 44 39 33 55 53 49 57
GP
PI3L500-AZFEX-GP

		Vendor P/N	Wistron P/N
1st	Pericom	PI3L500AZFEX	73.3L500.003
2nd	TI	TS3L500AERHUR	73.3L500.A0V
3rd	ST	STMUX1800LQTR	73.01800.003

<Core Design>

緯創資通 **Wistron Corporation**
21F, 88, Sec.1, Hsin Tai Wu Rd., Hsichih,
Taipei Hsien 221, Taiwan, R.O.C.

Title
GBE LAN Switch

Size A4
Document Number **Dasher-2**
Rev **-1**

Date: Friday, March 09, 2012
Sheet 50 of 101

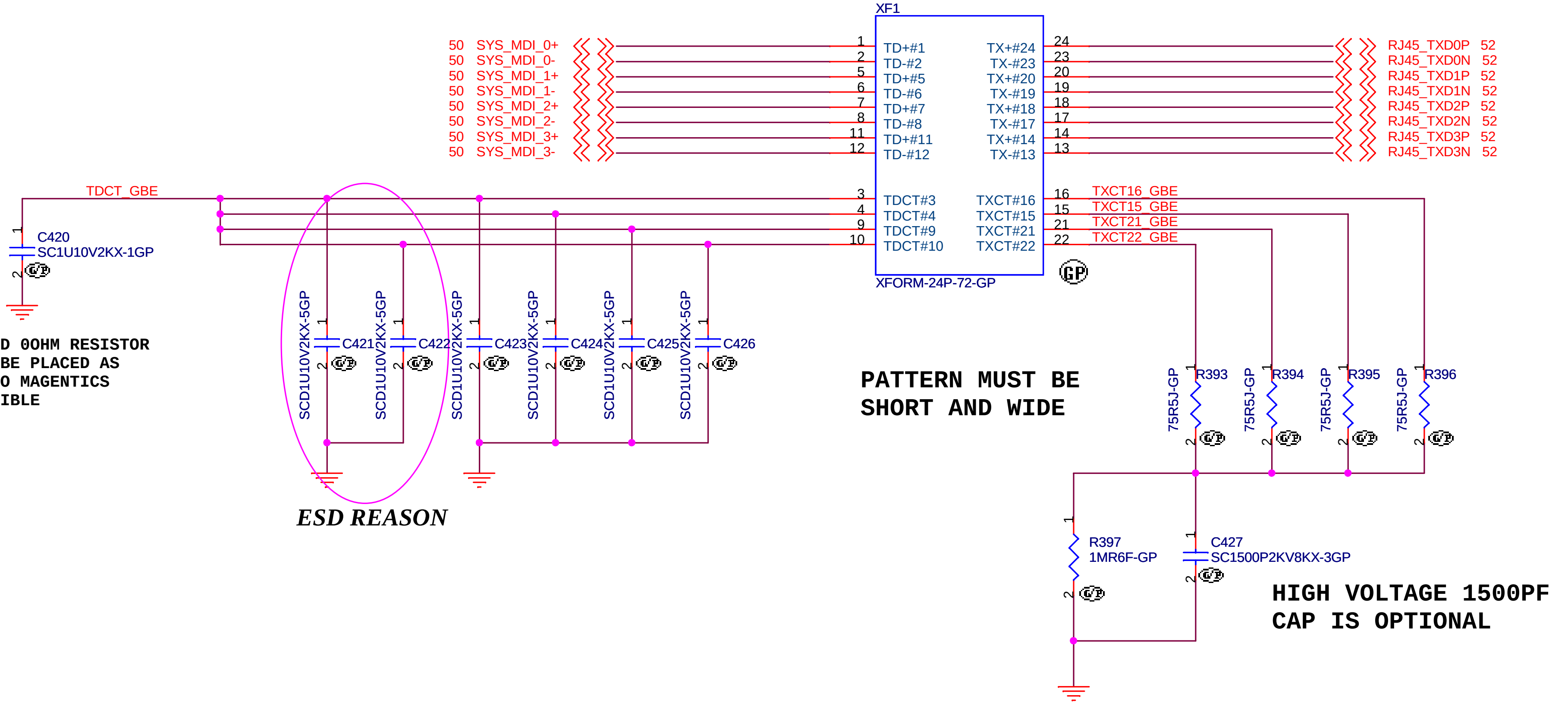
XF1
XFORM-24P-72-GP
50 SYS_MDI_0+
50 SYS_MDI_0-
50 SYS_MDI_1+
50 SYS_MDI_1-
50 SYS_MDI_2+
50 SYS_MDI_2-
50 SYS_MDI_3+
50 SYS_MDI_3-
1 TD+#1
2 TD-#2
5 TD+#5
6 TD-#6
7 TD+#7
8 TD-#8
11 TD+#11
12 TD-#12
3 TDCT#3
4 TDCT#4
9 TDCT#9
10 TDCT#10
TX+#24 24
TX-#23 23
TX+#20 20
TX-#19 19
TX+#18 18
TX-#17 17
TX+#14 14
TX-#13 13
TXCT#16 16
TXCT#15 15
TXCT#21 21
TXCT#22 22
RJ45_TXD0P 52
RJ45_TXD0N 52
RJ45_TXD1P 52
RJ45_TXD1N 52
RJ45_TXD2P 52
RJ45_TXD2N 52
RJ45_TXD3P 52
RJ45_TXD3N 52
TDCT_GBE
TXCT16_GBE
TXCT15_GBE
TXCT21_GBE
TXCT22_GBE
C420
SC1U10V2KX-1GP
C421
C422
C423
C424
C425
C426
SCD1U10V2KX-5GP
SCD1U10V2KX-5GP
SCD1U10V2KX-5GP
SCD1U10V2KX-5GP
SCD1U10V2KX-5GP
SCD1U10V2KX-5GP
R393
R394
R395
R396
75R5J-GP
75R5J-GP
75R5J-GP
75R5J-GP
R397
1MR6F-GP
C427
SC1500P2KV8KX-3GP
GP

C420 AND 0OHM RESISTOR SHOULD BE PLACED AS CLOSE TO MAGENTICS AS POSSIBLE

ESD REASON

PATTERN MUST BE SHORT AND WIDE

HIGH VOLTAGE 1500PF CAP IS OPTIONAL

<Core Design>

緯創資通 **Wistron Corporation**
21F, 88, Sec.1, Hsin Tai Wu Rd., Hsichih,
Taipei Hsien 221, Taiwan, R.O.C.

Title	***GBE MAGNETICS***	
Size Custom	Document Number **Dasher-2**	Rev **-1**
Date: Friday, March 09, 2012	Sheet 51 of 101	

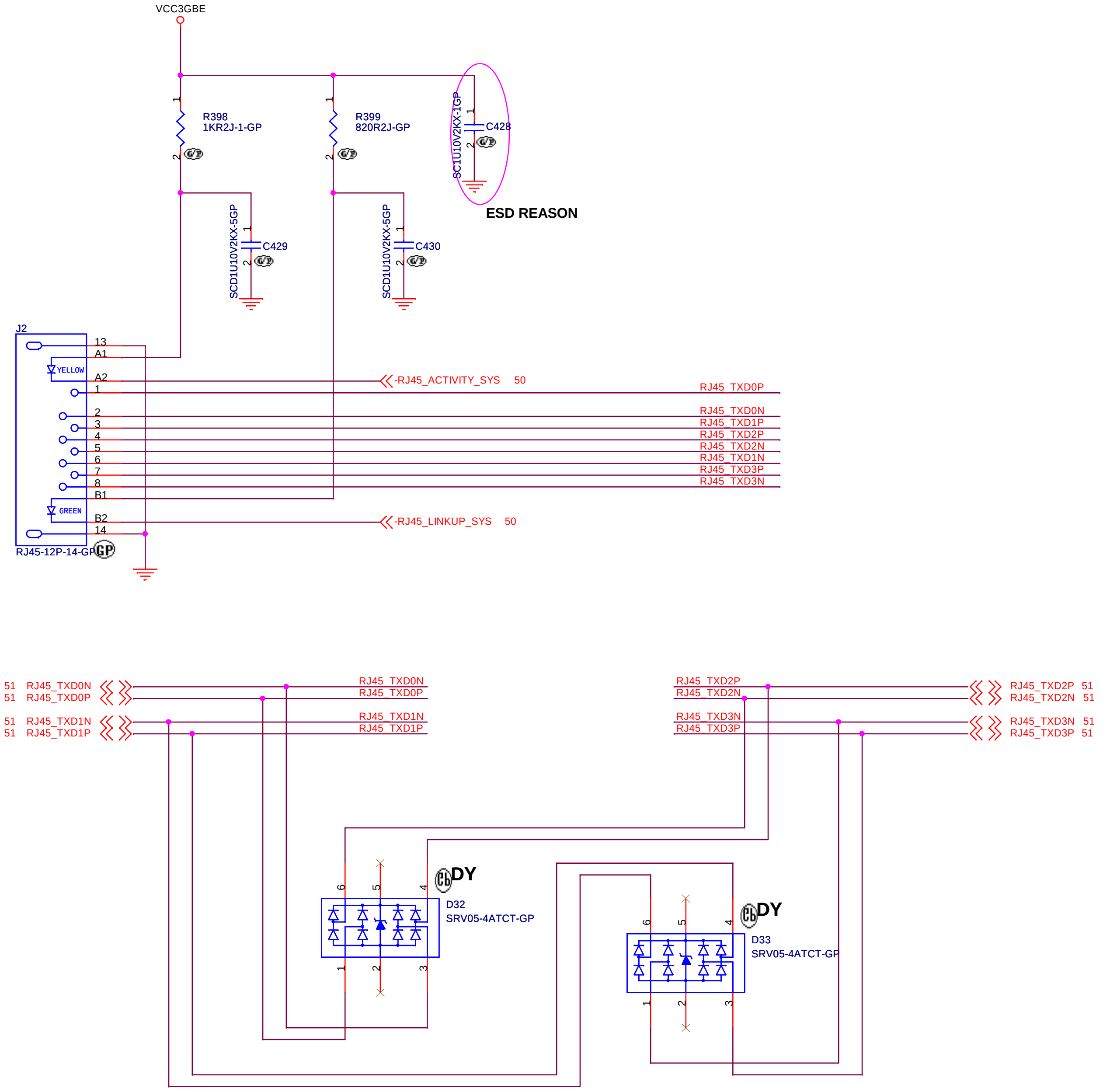
VCC3GBE
R398
1KR2J-1-GP
R399
820R2J-GP
SC1U10V2KX-1GP
C428
ESD REASON
SCD1U10V2KX-5GP
C429
SCD1U10V2KX-5GP
C430
J2
YELLOW
GREEN
13
A1
A2
1
2
3
4
5
6
7
8
B1
B2
14
RJ45-12P-14-GP
GP
RJ45_ACTIVITY_SYS 50
RJ45_TXD0P
RJ45_TXD0N
RJ45_TXD1P
RJ45_TXD2P
RJ45_TXD2N
RJ45_TXD1N
RJ45_TXD3P
RJ45_TXD3N
RJ45_LINKUP_SYS 50
51 RJ45_TXD0N
51 RJ45_TXD0P
51 RJ45_TXD1N
51 RJ45_TXD1P
RJ45_TXD0N
RJ45_TXD0P
RJ45_TXD1N
RJ45_TXD1P
RJ45_TXD2P
RJ45_TXD2N
RJ45_TXD3N
RJ45_TXD3P
RJ45_TXD2P 51
RJ45_TXD2N 51
RJ45_TXD3N 51
RJ45_TXD3P 51
DY
D32
SRV05-4ATCT-GP
DY
D33
SRV05-4ATCT-GP

<Core Design>

緯創資通 **Wistron Corporation**
21F, 88, Sec.1, Hsin Tai Wu Rd., Hsichih,
Taipei Hsien 221, Taiwan, R.O.C.

Title
RJ45 CONNECTOR

Size A3
Document Number **Dasher-2**
Rev -1

Date: Friday, March 09, 2012
Sheet 52 of 101

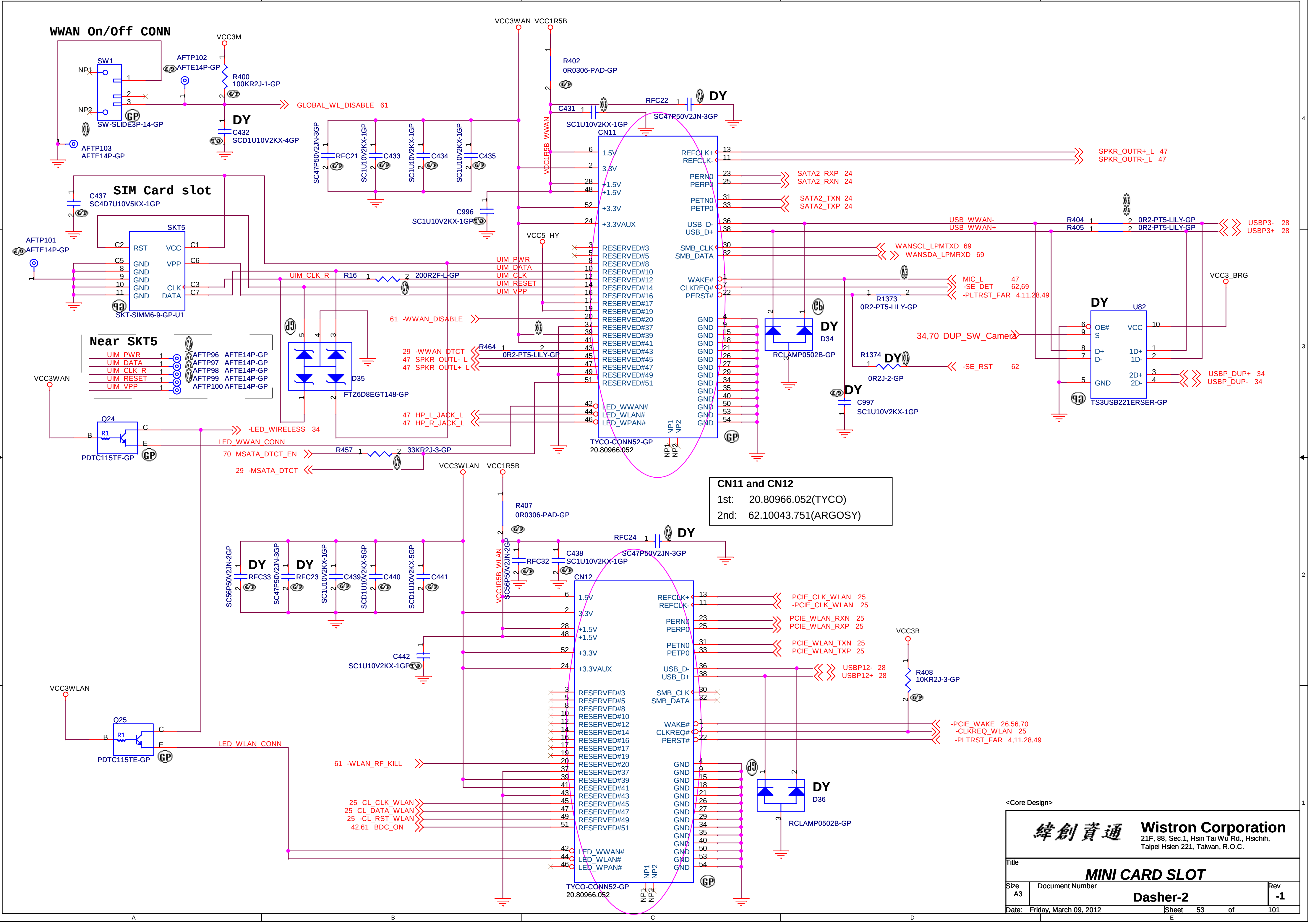
WWAN On/Off CONN
SW1
NP1
NP2
SW-SLIDE3P-14-GP
AFTP103
AFTE14P-GP
AFTP102
AFTE14P-GP
VCC3M
R400
100KR2J-1-GP
DY
C432
SCD1U10V2KX-4GP
GLOBAL_WL_DISABLE 61
VCC3WAN
VCC1R5B
R402
0R0306-PAD-GP
C431
SC1U10V2KX-1GP
RFC22
SC47P50V2JN-3GP
DY
CN11
SC47P50V2JN-3GP
RFC21
SC1U10V2KX-1GP
C433
SC1U10V2KX-1GP
C434
SC1U10V2KX-1GP
C435
VCC1R5B_WWAN
C996
SC1U10V2KX-1GP
SIM Card slot
C437
SC4D7U10V5KX-1GP
SKT5
RST
VCC
GND
VPP
CLK
DATA
C1
C2
C3
C5
C6
C7
SKT-SIMM6-9-GP-U1
AFTP101
AFTE14P-GP
UIM_PWR
UIM_DATA
UIM_CLK
UIM_RESET
UIM_VPP
UIM_CLK_R
R16
200R2F-L-GP
VCC5_HY
1.5V
3.3V
+1.5V
+3.3V
+3.3VAUX
RESERVED#3
RESERVED#5
RESERVED#8
RESERVED#10
RESERVED#12
RESERVED#14
RESERVED#16
RESERVED#17
RESERVED#19
RESERVED#20
RESERVED#37
RESERVED#39
RESERVED#41
RESERVED#43
RESERVED#45
RESERVED#47
RESERVED#49
RESERVED#51
LED_WWAN#
LED_WLAN#
LED_WPAN#
NP1
NP2
TYCO-CONN52-GP
20.80966.052
REFCLK+
REFCLK-
PERN0
PERP0
PETN0
PETP0
USB_D-
USB_D+
SMB_CLK
SMB_DATA
WAKE#
CLKREQ#
PERST#
GND
SPKR_OUTR+_L 47
SPKR_OUTR-_L 47
SATA2_RXP 24
SATA2_RXN 24
SATA2_TXN 24
SATA2_TXP 24
USB_WWAN-
USB_WWAN+
R404
R405
0R2-PT5-LILY-GP
USBP3- 28
USBP3+ 28
WANSCL_LPMTXD 69
WANSDA_LPMRXD 69
MIC_L 47
-SE_DET 62,69
-PLTRST_FAR 4,11,28,49
R1373
0R2-PT5-LILY-GP
VCC3_BRG
DY
U82
OE#
S
VCC
D+
D-
1D+
1D-
2D+
2D-
GND
TS3USB221ERSER-GP
34,70 DUP_SW_Camera
USBP_DUP+ 34
USBP_DUP- 34
R1374
DY
0R2J-2-GP
-SE_RST 62
DY
C997
SC1U10V2KX-1GP
DY
D34
RCLAMP0502B-GP
61 -WWAN_DISABLE
29 -WWAN_DTCT
47 SPKR_OUTL-_L
47 SPKR_OUTL+_L
R464
0R2-PT5-LILY-GP
47 HP_L_JACK_L
47 HP_R_JACK_L
D35
FTZ6D8EGT148-GP
Near SKT5
AFTP96 AFTE14P-GP
AFTP97 AFTE14P-GP
AFTP98 AFTE14P-GP
AFTP99 AFTE14P-GP
AFTP100 AFTE14P-GP
VCC3WAN
Q24
R1
PDTC115TE-GP
-LED_WIRELESS 34
LED_WWAN_CONN
70 MSATA_DTCT_EN
R457
33KR2J-3-GP
29 -MSATA_DTCT
VCC3WLAN
VCC1R5B
R407
0R0306-PAD-GP
RFC24
SC47P50V2JN-3GP
DY
RFC32
SC56P50V2JN-2GP
C438
SC1U10V2KX-1GP
CN12
VCC1R5B_WLAN
SC56P50V2JN-2GP
RFC33
DY
SC47P50V2JN-3GP
RFC23
DY
SC1U10V2KX-1GP
C439
SCD1U10V2KX-5GP
C440
SCD1U10V2KX-5GP
C441
C442
SC1U10V2KX-1GP
PCIE_CLK_WLAN 25
-PCIE_CLK_WLAN 25
PCIE_WLAN_RXN 25
PCIE_WLAN_RXP 25
PCIE_WLAN_TXN 25
PCIE_WLAN_TXP 25
USBP12- 28
USBP12+ 28
VCC3B
R408
10KR2J-3-GP
-PCIE_WAKE 26,56,70
-CLKREQ_WLAN 25
-PLTRST_FAR 4,11,28,49
VCC3WLAN
Q25
R1
PDTC115TE-GP
LED_WLAN_CONN
61 -WLAN_RF_KILL
25 CL_CLK_WLAN
25 CL_DATA_WLAN
25 -CL_RST_WLAN
42,61 BDC_ON
DY
D36
RCLAMP0502B-GP
TYCO-CONN52-GP
20.80966.052

CN11 and CN12

1st:	20.80966.052(TYCO)
2nd:	62.10043.751(ARGOSY)

<Core Design>

緯創資通

Wistron Corporation

21F, 88, Sec.1, Hsin Tai Wu Rd., Hsichih,
Taipei Hsien 221, Taiwan, R.O.C.

Title

MINI CARD SLOT

Size A3
Document Number Dasher-2
Rev -1

Date: Friday, March 09, 2012
Sheet 53 of 101

MEDIA I/F	SD/MMC	MEMORYSTICK	XD
MFIO00	SDWP#	MSBS	XD_D7
MFIO01	SD_D1		XD_D6
MFIO02	SD_D0	MS_D1	XD_D5
MFIO03	(SD_D7)		XD_D4
MFIO04	(SD_D6)	(MS_D5)	XD_D3
MFIO05	SD_CLK	MSD0	XD_D2
MFIO06			XD_D1
MFIO07	(SD_D5)	(MS_D4)	XD_D0
MFIO08	SD_CDM	MS_D2	XD_WP#
MFIO09	(SD_D4)	(MS_D6)	XD_WE#
MFIO10	SD_D3	MS_D3	XD_ALE
MFIO11	SD_D2		XD_CLE
MFIO12			XD_CE#
MFIO13		(MS_D7)	XD_RE#
MFIO14		MS_CLK	XD_R/B
MFCD0#	SDDC#		XDCD0#
MFCD1#		MSINS#	XDCD1#

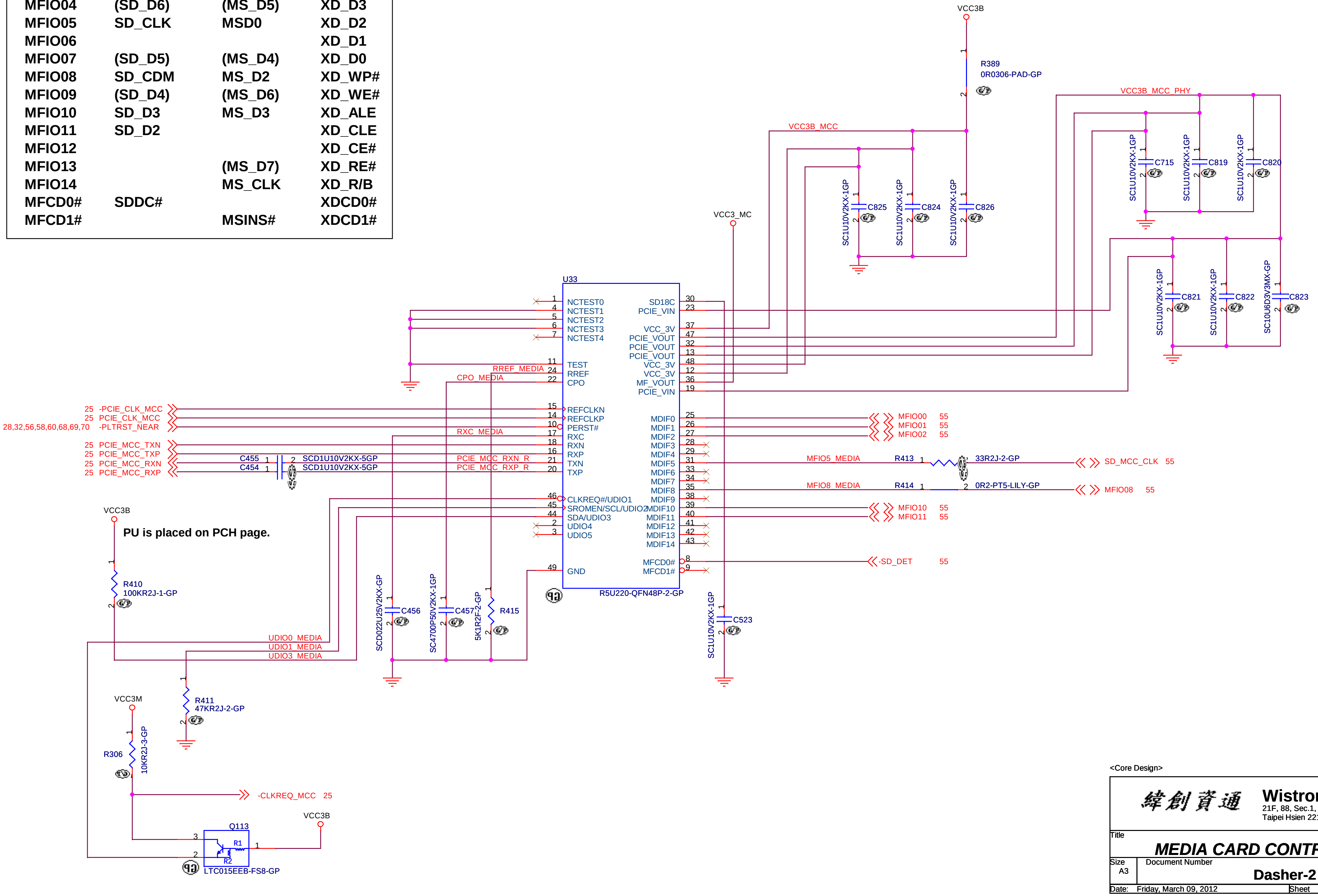

VCC3B
R389
0R0306-PAD-GP
VCC3B_MCC_PHY
VCC3B_MCC
SC1U10V2KX-1GP
C715
C819
C820
C825
C824
C826
VCC3_MC
U33
NCTEST0
NCTEST1
NCTEST2
NCTEST3
NCTEST4
TEST
RREF
CPO
SD18C
PCIE_VIN
VCC_3V
PCIE_VOUT
PCIE_VOUT
PCIE_VOUT
VCC_3V
VCC_3V
MF_VOUT
PCIE_VIN
SC1U10V2KX-1GP
SC10U6D3V3MX-GP
C821
C822
C823
RREF_MEDIA
CPO_MEDIA
25 -PCIE_CLK_MCC
25 PCIE_CLK_MCC
28,32,56,58,60,68,69,70 -PLTRST_NEAR
25 PCIE_MCC_TXN
25 PCIE_MCC_TXP
25 PCIE_MCC_RXN
25 PCIE_MCC_RXP
C455
C454
SCD1U10V2KX-5GP
SCD1U10V2KX-5GP
RXC_MEDIA
PCIE_MCC_RXN_R
PCIE_MCC_RXP_R
REFCLKN
REFCLKP
PERST#
RXC
RXN
RXP
TXN
TXP
CLKREQ#/UDIO1
SROMEN/SCL/UDIO2
SDA/UDIO3
UDIO4
UDIO5
GND
R5U220-QFN48P-2-GP
MDIF0
MDIF1
MDIF2
MDIF3
MDIF4
MDIF5
MDIF6
MDIF7
MDIF8
MDIF9
MDIF10
MDIF11
MDIF12
MDIF13
MDIF14
MFCD0#
MFCD1#
MFIO00 55
MFIO01 55
MFIO02 55
MFIO5_MEDIA
R413
33R2J-2-GP
SD_MCC_CLK 55
MFIO8_MEDIA
R414
0R2-PT5-LILY-GP
MFIO08 55
MFIO10 55
MFIO11 55
-SD_DET 55
VCC3B
PU is placed on PCH page.
R410
100KR2J-1-GP
UDIO0_MEDIA
UDIO1_MEDIA
UDIO3_MEDIA
SCD022U25V2KX-GP
C456
SC4700P50V2KX-1GP
C457
5K1R2F-2-GP
R415
SC1U10V2KX-1GP
C523
R411
47KR2J-2-GP
VCC3M
R306
10KR2J-3-GP
-CLKREQ_MCC 25
VCC3B
Q113
R1
R2
LTC015EEB-FS8-GP

<Core Design>

緯創資通 **Wistron Corporation**
21F, 88, Sec.1, Hsin Tai Wu Rd., Hsichih,
Taipei Hsien 221, Taiwan, R.O.C.

Title
MEDIA CARD CONTROLLER

Size A3 Document Number **Dasher-2** Rev **-1**

Date: Friday, March 09, 2012 Sheet 54 of 101

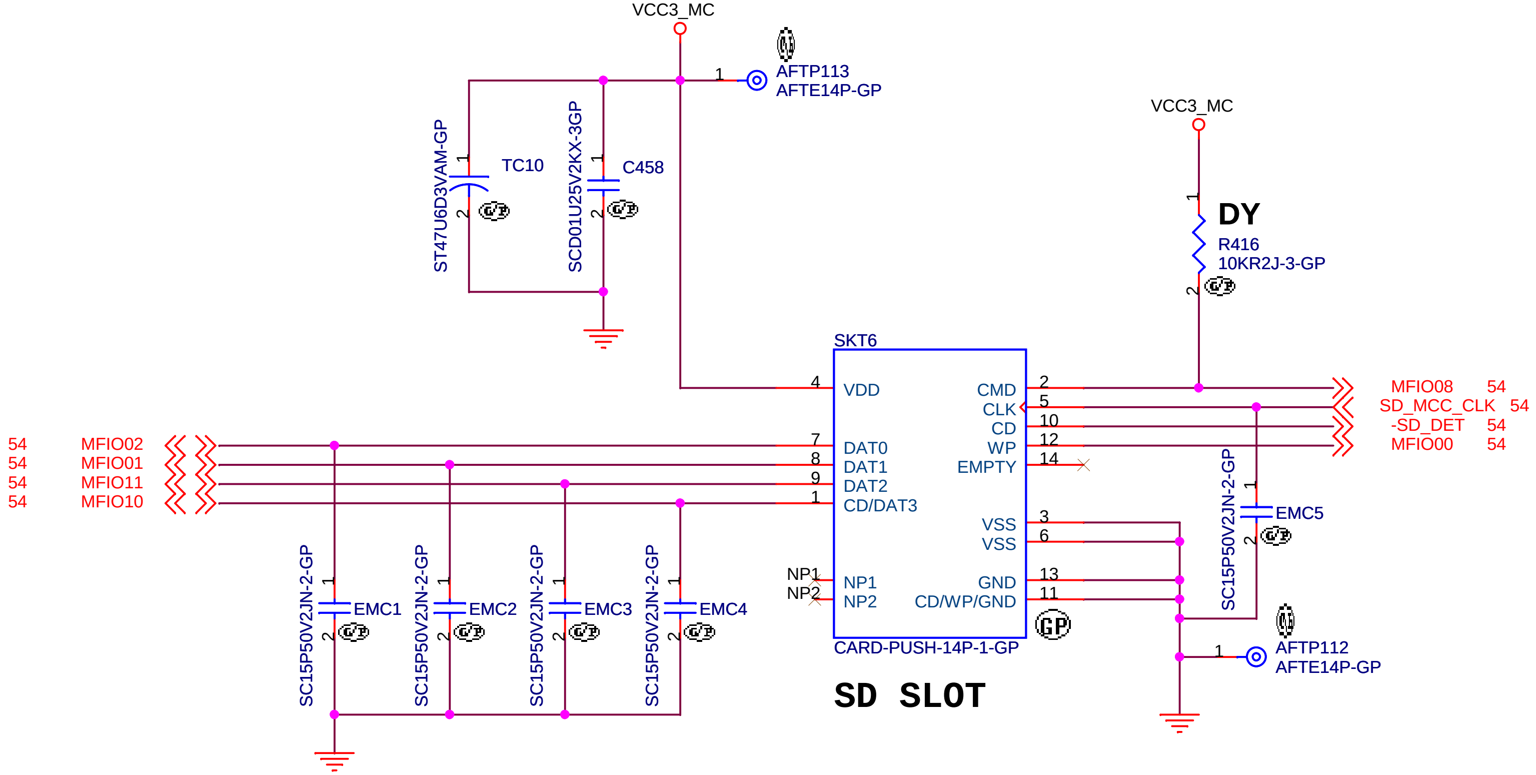
VCC3_MC
AFTP113
AFTE14P-GP
TC10
ST47U6D3VAM-GP
C458
SCD01U25V2KX-3GP
VCC3_MC
DY
R416
10KR2J-3-GP
SKT6
VDD
CMD
CLK
CD
WP
EMPTY
DAT0
DAT1
DAT2
CD/DAT3
VSS
VSS
NP1
NP2
GND
CD/WP/GND
CARD-PUSH-14P-1-GP
MFIO08 54
SD_MCC_CLK 54
-SD_DET 54
MFIO00 54
54 MFIO02
54 MFIO01
54 MFIO11
54 MFIO10
EMC1
EMC2
EMC3
EMC4
EMC5
SC15P50V2JN-2-GP
AFTP112
AFTE14P-GP
SD SLOT

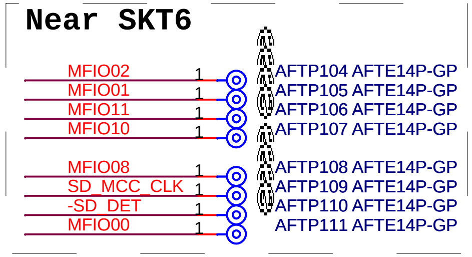
Near SKT6
MFIO02
MFIO01
MFIO11
MFIO10
MFIO08
SD_MCC_CLK
-SD_DET
MFIO00
AFTP104 AFTE14P-GP
AFTP105 AFTE14P-GP
AFTP106 AFTE14P-GP
AFTP107 AFTE14P-GP
AFTP108 AFTE14P-GP
AFTP109 AFTE14P-GP
AFTP110 AFTE14P-GP
AFTP111 AFTE14P-GP

<Core Design>

緯創資通

Wistron Corporation
21F, 88, Sec.1, Hsin Tai Wu Rd., Hsichih,
Taipei Hsien 221, Taiwan, R.O.C.

Title
Media Card Slot

Size A4
Document Number **Dasher-2**
Rev **-1**

Date: Friday, March 09, 2012 Sheet 55 of 101

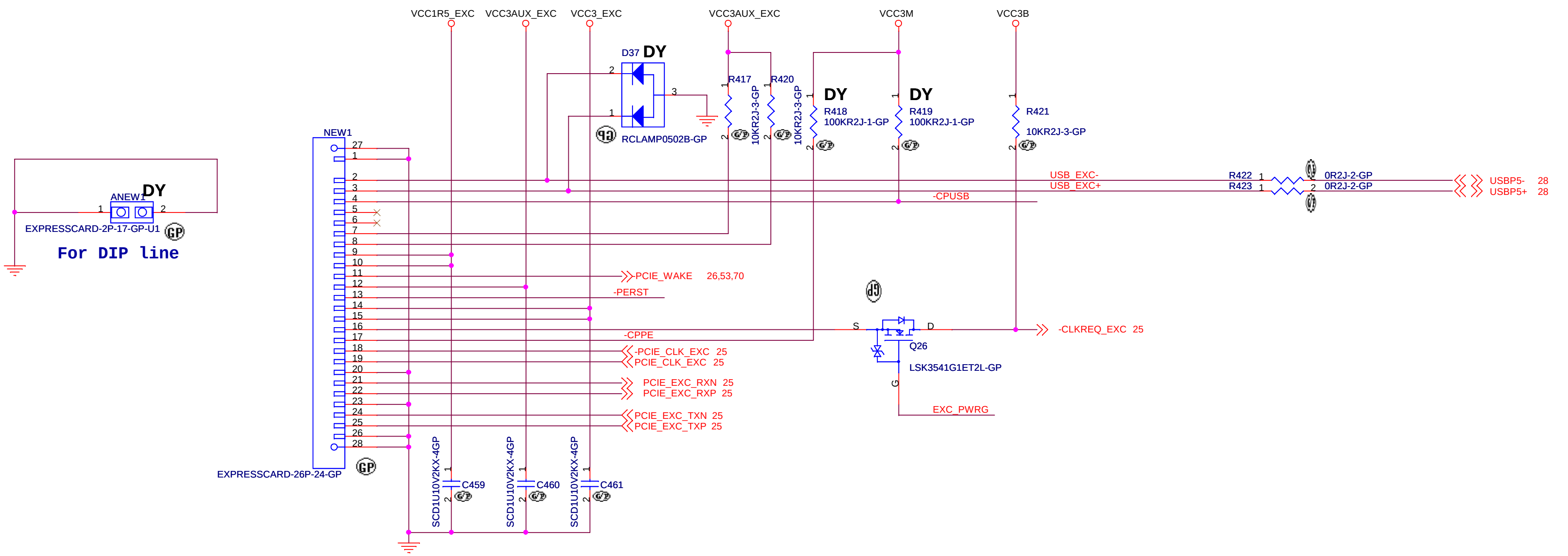
VCC1R5_EXC
VCC3AUX_EXC
VCC3_EXC
VCC3AUX_EXC
VCC3M
VCC3B
D37 DY
RCLAMP0502B-GP
R417
10KR2J-3-GP
R420
10KR2J-3-GP
DY
R418
100KR2J-1-GP
DY
R419
100KR2J-1-GP
R421
10KR2J-3-GP
NEW1
EXPRESSCARD-26P-24-GP
ANEW1 DY
EXPRESSCARD-2P-17-GP-U1
For DIP line
USB_EXC-
USB_EXC+
-CPUSB
R422
R423
0R2J-2-GP
0R2J-2-GP
USBP5- 28
USBP5+ 28
PCIE_WAKE 26,53,70
-PERST
-CPPE
-PCIE_CLK_EXC 25
PCIE_CLK_EXC 25
PCIE_EXC_RXN 25
PCIE_EXC_RXP 25
PCIE_EXC_TXN 25
PCIE_EXC_TXP 25
Q26
LSK3541G1ET2L-GP
-CLKREQ_EXC 25
EXC_PWRG
C459
SCD1U10V2KX-4GP
C460
SCD1U10V2KX-4GP
C461
SCD1U10V2KX-4GP

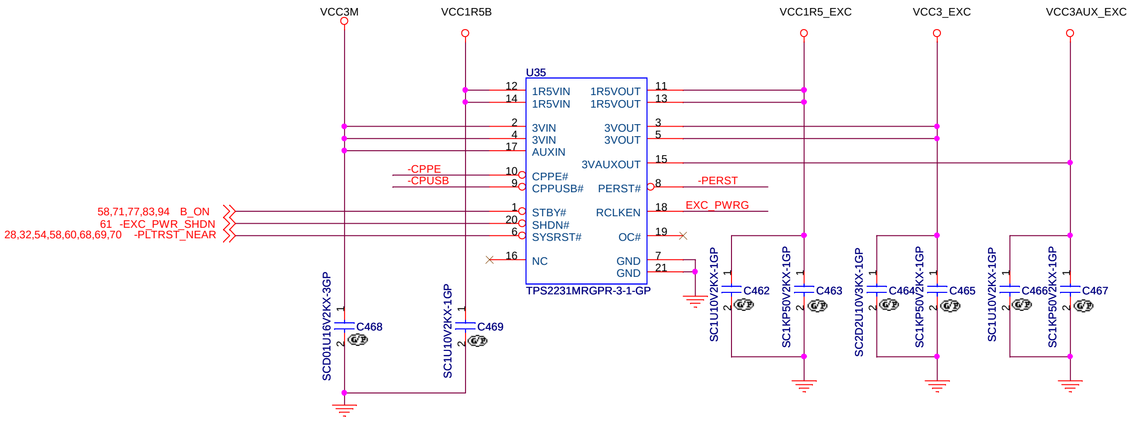
VCC3M
VCC1R5B
VCC1R5_EXC
VCC3_EXC
VCC3AUX_EXC
U35
1R5VIN
1R5VIN
3VIN
3VIN
AUXIN
CPPE#
CPPUSB#
STBY#
SHDN#
SYSRST#
NC
1R5VOUT
1R5VOUT
3VOUT
3VOUT
3VAUXOUT
PERST#
RCLKEN
OC#
GND
GND
TPS2231MRGPR-3-1-GP
-CPPE
-CPUSB
58,71,77,83,94 B_ON
61 -EXC_PWR_SHDN
28,32,54,58,60,68,69,70 -PLTRST_NEAR
-PERST
EXC_PWRG
C468
SCD01U16V2KX-3GP
C469
SC1U10V2KX-1GP
C462
SC1U10V2KX-1GP
C463
SC1KP50V2KX-1GP
C464
SC2D2U10V3KX-1GP
C465
SC1KP50V2KX-1GP
C466
SC1U10V2KX-1GP
C467
SC1KP50V2KX-1GP

U35			
	TI	TPS2231MRGP-3	45K0234BA
	Rohm	BD4156MUV-GTR	74.04156.A73
	Rohm	BD4157MUV-GE2	74.04157.A73

<Core Design>

緯創資通 **Wistron Corporation**
21F, 88, Sec.1, Hsin Tai Wu Rd., Hsichih,
Taipei Hsien 221, Taiwan, R.O.C.

Title
Express Card Connector

Size Custom
Document Number **Dasher-2**
Rev -1

Date: Friday, March 09, 2012
Sheet 56 of 101

BLANK

<Core Design>

緯創資通 **Wistron Corporation**
21F, 88, Sec.1, Hsin Tai Wu Rd., Hsichih,
Taipei Hsien 221, Taiwan, R.O.C.

Title ***BLANK***		
Size A	Document Number **Dasher-2**	Rev **-1**
Date: Tuesday, February 21, 2012	Sheet 57 of 101	

Debug card connector

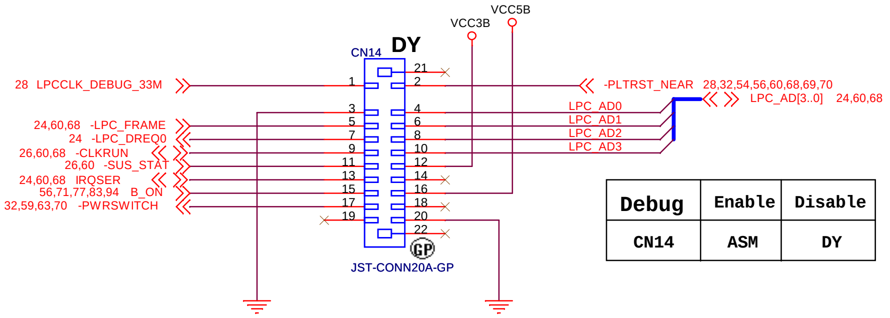
VCC3B
VCC5B
CN14
DY
28 LPCCLK_DEBUG_33M
24,60,68 -LPC_FRAME
24 -LPC_DREQ0
26,60,68 -CLKRUN
26,60 -SUS_STAT
24,60,68 IRQSER
56,71,77,83,94 B_ON
32,59,63,70 -PWRSWITCH
-PLTRST_NEAR 28,32,54,56,60,68,69,70
LPC_AD[3..0] 24,60,68
LPC_AD0
LPC_AD1
LPC_AD2
LPC_AD3
1 2 3 4 5 6 7 8 9 10 11 12 13 14 15 16 17 18 19 20 21 22
JST-CONN20A-GP
GP

Debug	Enable	Disable
CN14	ASM	DY

Put "easy-to -access" place

Golden Finger for Debug Board

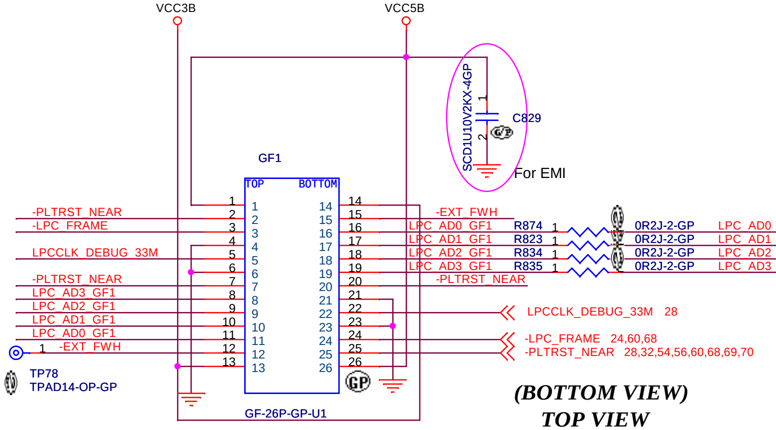
VCC3B
VCC5B
SCD1U10V2KX-4GP
C829
For EMI
GF1
TOP
BOTTOM
-PLTRST_NEAR
-LPC_FRAME
LPCCLK_DEBUG_33M
-PLTRST_NEAR
LPC_AD3_GF1
LPC_AD2_GF1
LPC_AD1_GF1
LPC_AD0_GF1
-EXT_FWH
TP78
TPAD14-OP-GP
-EXT_FWH
LPC_AD0_GF1
LPC_AD1_GF1
LPC_AD2_GF1
LPC_AD3_GF1
-PLTRST_NEAR
R874
R823
R834
R835
0R2J-2-GP
0R2J-2-GP
0R2J-2-GP
0R2J-2-GP
LPC_AD0
LPC_AD1
LPC_AD2
LPC_AD3
LPC_AD[3..0] 24,60,68
LPCCLK_DEBUG_33M 28
-LPC_FRAME 24,60,68
-PLTRST_NEAR 28,32,54,56,60,68,69,70
GF-26P-GP-U1
GP

(BOTTOM VIEW)

TOP VIEW

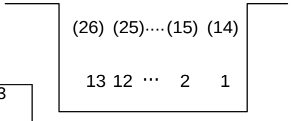
(26) (25)····(15) (14)
13 12 ··· 2 1

GF1

	Yes	No
R874	ASM	DY
R823	ASM	DY
R834	ASM	DY
R835	ASM	DY
R235	ASM	DY

Logic

4MB			
S08	Marcronix	MX25L3206EM2I-12G	72.25320.C01
	Winbond	W25Q032BVSSIG	72.25Q32.A01
	Eon	EN25QH32-104HIP	72.02532.B01
	Numonyx	N25Q032A13ESEC0	72.25Q32.C01
8MB			
S08	Marcronix	MX25L6406EM2I-12G	72.25640.D01
	Winbond	W25Q064CVSSIG	72.25Q64.B01
	Eon	EN25QH64-104HIP	72.02564.001
	Numonyx	N25Q064A13ESEC0	72.25Q64.G01
	Winbond	W25Q64FVSSIG	72.25Q64.F01

Configuration Table

	CONFIG-1 16MB	CONFIG-2 12MB	CONFIG-3 8MB
SPI1	16MB	8MB	8MB
SPI2	DY	4MB	DY
R429	DY	ASM	DY
R431	DY	ASM	DY
R433	DY	ASM	DY
R1375	DY	ASM	DY
R1376	DY	ASM	DY
C471	DY	ASM	DY
R149(P.24)	DY	ASM	DY
R122	DY	ASM	DY

Logic

Dual Layout

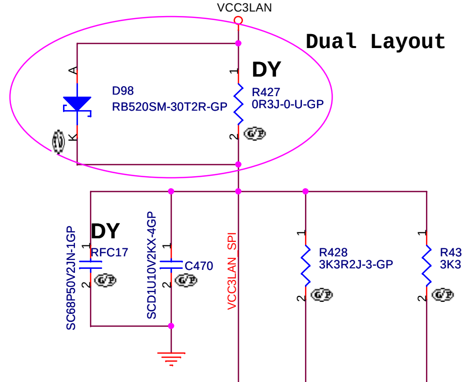
VCC3LAN
A
K
D98
RB520SM-30T2R-GP
DY
R427
0R3J-0-U-GP
DY
RFC17
SC68P50V2JN-1GP
SCD1U10V2KX-4GP
C470
VCC3LAN_SPI
R428
3K3R2J-3-GP
R433
3K3R2J-3-GP

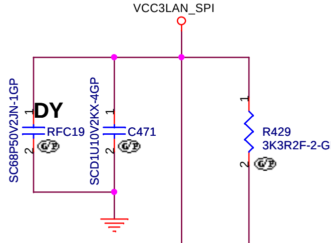
VCC3LAN_SPI
DY
RFC19
SC68P50V2JN-1GP
SCD1U10V2KX-4GP
C471
R429
3K3R2F-2-GP

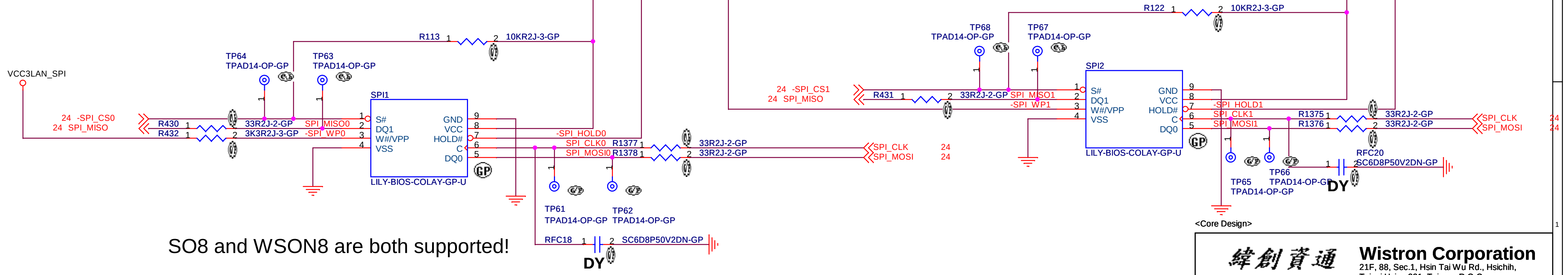
VCC3LAN_SPI
24 -SPI_CS0
24 SPI_MISO
R430
R432
33R2J-2-GP
3K3R2J-3-GP
SPI_MISO0
-SPI_WP0
TP64
TPAD14-OP-GP
TP63
TPAD14-OP-GP
R113
10KR2J-3-GP
SPI1
S#
DQ1
W#/VPP
VSS
GND
VCC
HOLD#
C
DQ0
LILY-BIOS-COLAY-GP-U
-SPI_HOLD0
SPI_CLK0
SPI_MOSI0
R1377
R1378
33R2J-2-GP
33R2J-2-GP
SPI_CLK 24
SPI_MOSI 24
TP61
TPAD14-OP-GP
TP62
TPAD14-OP-GP
RFC18
SC6D8P50V2DN-GP
DY
24 -SPI_CS1
24 SPI_MISO
R431
33R2J-2-GP
SPI_MISO1
-SPI_WP1
TP68
TPAD14-OP-GP
TP67
TPAD14-OP-GP
R122
10KR2J-3-GP
SPI2
S#
DQ1
W#/VPP
VSS
GND
VCC
HOLD#
C
DQ0
LILY-BIOS-COLAY-GP-U
-SPI_HOLD1
SPI_CLK1
SPI_MOSI1
R1375
R1376
33R2J-2-GP
33R2J-2-GP
SPI_CLK 24
SPI_MOSI 24
RFC20
SC6D8P50V2DN-GP
TP65
TPAD14-OP-GP
TP66
TPAD14-OP-GP
DY
GP

SO8 and WSON8 are both supported!

<Core Design>

緯創資通 **Wistron Corporation**
21F, 88, Sec.1, Hsin Tai Wu Rd., Hsichih,
Taipei Hsien 221, Taiwan, R.O.C.

Title
SPI&LPC debug card

Size A3
Document Number **Dasher-2**
Rev **-1**

Date: Friday, March 09, 2012
Sheet 58 of 101

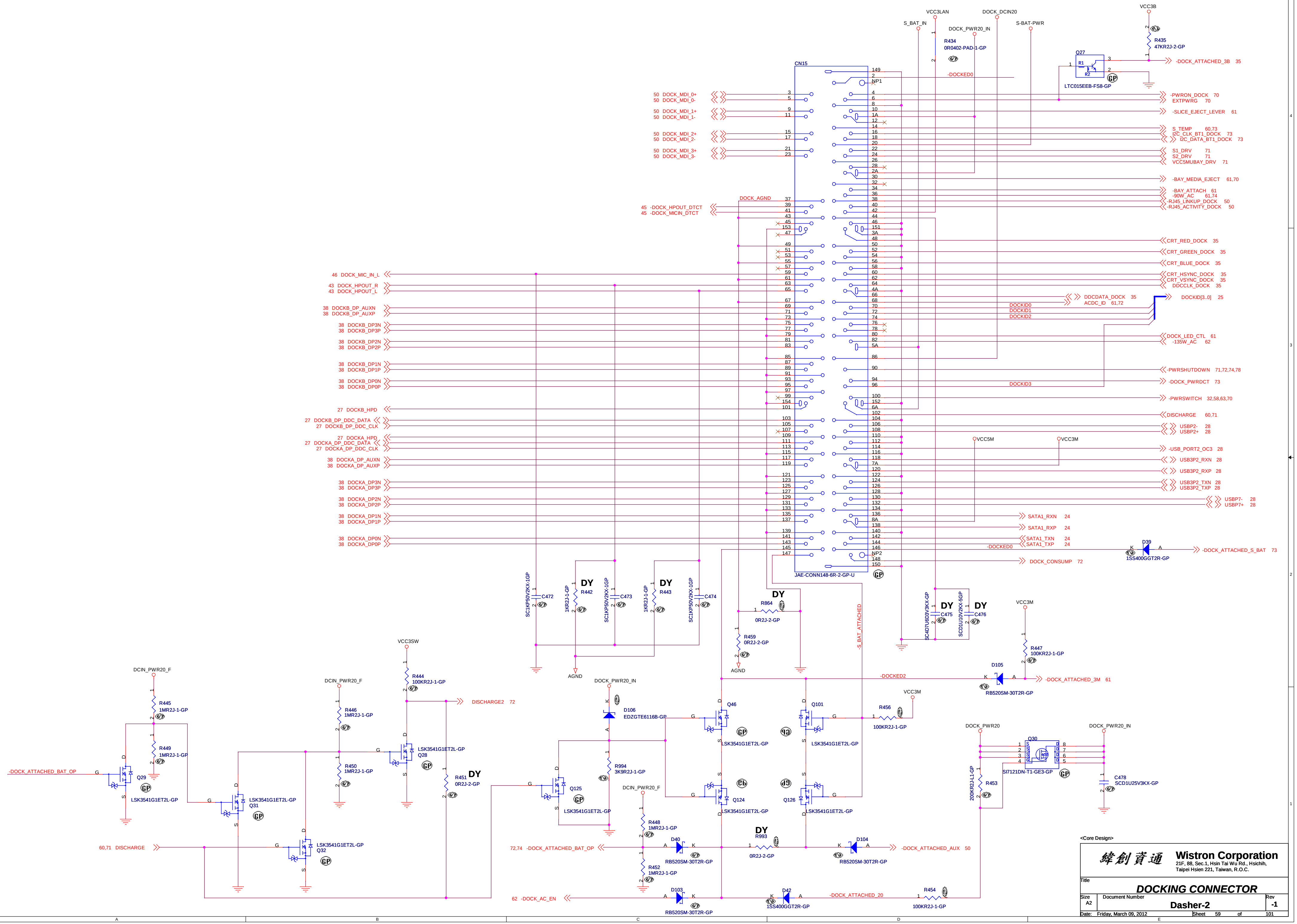
CN15
JAE-CONN148-6R-2-GP-U
S_BAT_IN
VCC3LAN
DOCK_PWR20_IN
DOCK_DCIN20
S-BAT-PWR
VCC3B
R434
0R0402-PAD-1-GP
R435
47KR2J-2-GP
Q27
LTC015EEB-FS8-GP
-DOCK_ATTACHED_3B 35
-DOCKED0
-PWRON_DOCK 70
EXTPWRG 70
-SLICE_EJECT_LEVER 61
S_TEMP 60,73
I2C_CLK_BT1_DOCK 73
I2C_DATA_BT1_DOCK 73
S1_DRV 71
S2_DRV 71
VCC5MUBAY_DRV 71
-BAY_MEDIA_EJECT 61,70
-BAY_ATTACH 61
-90W_AC 61,74
-RJ45_LINKUP_DOCK 50
-RJ45_ACTIVITY_DOCK 50
50 DOCK_MDI_0+
50 DOCK_MDI_0-
50 DOCK_MDI_1+
50 DOCK_MDI_1-
50 DOCK_MDI_2+
50 DOCK_MDI_2-
50 DOCK_MDI_3+
50 DOCK_MDI_3-
DOCK_AGND
45 -DOCK_HPOUT_DTCT
45 -DOCK_MICIN_DTCT
CRT_RED_DOCK 35
CRT_GREEN_DOCK 35
CRT_BLUE_DOCK 35
CRT_HSYNC_DOCK 35
CRT_VSYNC_DOCK 35
DDCCLK_DOCK 35
DDCDATA_DOCK 35
ACDC_ID 61,72
DOCKID[3..0] 25
DOCKID0
DOCKID1
DOCKID2
DOCKID3
46 DOCK_MIC_IN_L
43 DOCK_HPOUT_R
43 DOCK_HPOUT_L
38 DOCKB_DP_AUXN
38 DOCKB_DP_AUXP
38 DOCKB_DP3N
38 DOCKB_DP3P
38 DOCKB_DP2N
38 DOCKB_DP2P
38 DOCKB_DP1N
38 DOCKB_DP1P
38 DOCKB_DP0N
38 DOCKB_DP0P
27 DOCKB_HPD
27 DOCKB_DP_DDC_DATA
27 DOCKB_DP_DDC_CLK
27 DOCKA_HPD
27 DOCKA_DP_DDC_DATA
27 DOCKA_DP_DDC_CLK
38 DOCKA_DP_AUXN
38 DOCKA_DP_AUXP
38 DOCKA_DP3N
38 DOCKA_DP3P
38 DOCKA_DP2N
38 DOCKA_DP2P
38 DOCKA_DP1N
38 DOCKA_DP1P
38 DOCKA_DP0N
38 DOCKA_DP0P
DOCK_LED_CTL 61
-135W_AC 62
-PWRSHUTDOWN 71,72,74,78
-DOCK_PWRDCT 73
-PWRSWITCH 32,58,63,70
DISCHARGE 60,71
USBP2- 28
USBP2+ 28
VCC5M
VCC3M
-USB_PORT2_OC3 28
USB3P2_RXN 28
USB3P2_RXP 28
USB3P2_TXN 28
USB3P2_TXP 28
USBP7- 28
USBP7+ 28
SATA1_RXN 24
SATA1_RXP 24
SATA1_TXN 24
SATA1_TXP 24
-DOCKED0
D39
1SS400GGT2R-GP
-DOCK_ATTACHED_S_BAT 73
DOCK_CONSUMP 72
NP1
NP2
C472
SC1KP50V2KX-1GP
DY
R442
1KR2J-1-GP
C473
SC1KP50V2KX-1GP
DY
R443
1KR2J-1-GP
C474
SC1KP50V2KX-1GP
AGND
DY
R864
0R2J-2-GP
R459
0R2J-2-GP
AGND
-S_BAT_ATTACHED
DY
C475
SC4D7U6D3V3KX-GP
DY
C476
SCD1U10V2KX-5GP
VCC3M
R447
100KR2J-1-GP
-DOCKED2
D105
RB520SM-30T2R-GP
-DOCK_ATTACHED_3M 61
VCC3SW
R444
100KR2J-1-GP
DISCHARGE2 72
DCIN_PWR20_F
R445
1MR2J-1-GP
R449
1MR2J-1-GP
-DOCK_ATTACHED_BAT_OP
Q29
LSK3541G1ET2L-GP
DCIN_PWR20_F
R446
1MR2J-1-GP
R450
1MR2J-1-GP
Q28
LSK3541G1ET2L-GP
R451
0R2J-2-GP
DY
Q31
LSK3541G1ET2L-GP
Q32
LSK3541G1ET2L-GP
60,71 DISCHARGE
DOCK_PWR20_IN
D106
EDZGTE6116B-GP
R994
3K9R2J-1-GP
Q125
LSK3541G1ET2L-GP
DCIN_PWR20_F
R448
1MR2J-1-GP
R452
1MR2J-1-GP
D40
RB520SM-30T2R-GP
72,74 -DOCK_ATTACHED_BAT_OP
D103
RB520SM-30T2R-GP
62 -DOCK_AC_EN
Q46
LSK3541G1ET2L-GP
Q124
LSK3541G1ET2L-GP
DY
R993
0R2J-2-GP
D42
1SS400GGT2R-GP
Q101
LSK3541G1ET2L-GP
Q126
LSK3541G1ET2L-GP
D104
RB520SM-30T2R-GP
-DOCK_ATTACHED_AUX 50
VCC3M
R456
100KR2J-1-GP
-DOCK_ATTACHED_20
R454
100KR2J-1-GP
DOCK_PWR20
R453
200KR2J-L1-GP
Q30
SI7121DN-T1-GE3-GP
DOCK_PWR20_IN
C478
SCD1U25V3KX-GP
A
B
C
D
E
1
2
3
4

<Core Design>

緯創資通 **Wistron Corporation**
21F, 88, Sec.1, Hsin Tai Wu Rd., Hsichih,
Taipei Hsien 221, Taiwan, R.O.C.

Title
DOCKING CONNECTOR

Size	Document Number	Rev
A2	Dasher-2	-1

Date: Friday, March 09, 2012 Sheet 59 of 101

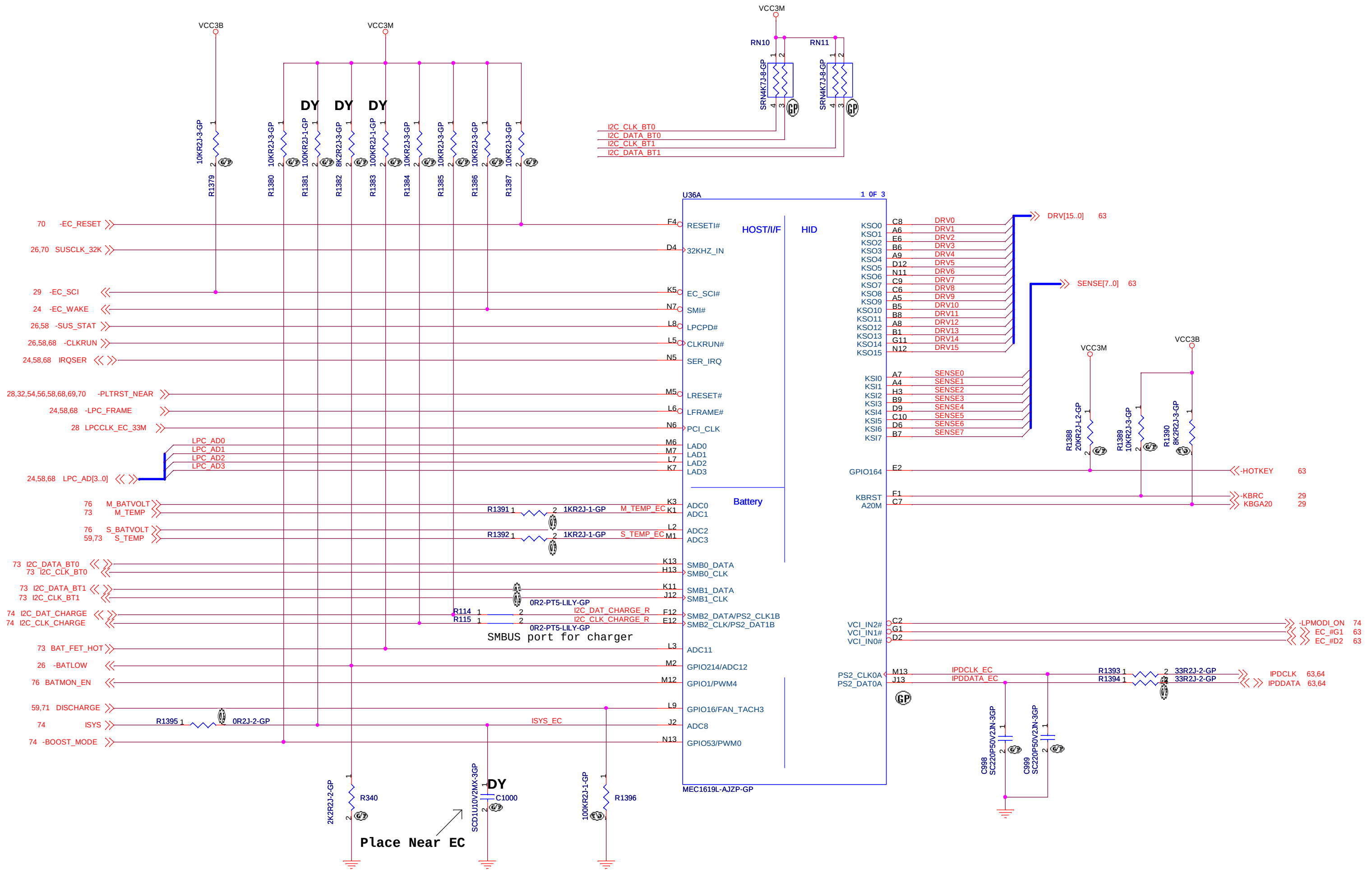
VCC3B
VCC3M
VCC3M
RN10
RN11
SRN4K7J-8-GP
SRN4K7J-8-GP
I2C_CLK_BT0
I2C_DATA_BT0
I2C_CLK_BT1
I2C_DATA_BT1
DY DY DY
R1379 10KR2J-3-GP
R1380 10KR2J-3-GP
R1381 100KR2J-1-GP
R1382 8K2R2J-3-GP
R1383 100KR2J-1-GP
R1384 10KR2J-3-GP
R1385 10KR2J-3-GP
R1386 10KR2J-3-GP
R1387 10KR2J-3-GP
U36A
1 OF 3
HOST/I/F
HID
Battery
70 -EC_RESET
26,70 SUSCLK_32K
29 -EC_SCI
24 -EC_WAKE
26,58 -SUS_STAT
26,58,68 -CLKRUN
24,58,68 IRQSER
28,32,54,56,58,68,69,70 -PLTRST_NEAR
24,58,68 -LPC_FRAME
28 LPCCLK_EC_33M
LPC_AD0
LPC_AD1
LPC_AD2
LPC_AD3
24,58,68 LPC_AD[3..0]
76 M_BATVOLT
73 M_TEMP
76 S_BATVOLT
59,73 S_TEMP
R1391 1KR2J-1-GP M_TEMP_EC
R1392 1KR2J-1-GP S_TEMP_EC
73 I2C_DATA_BT0
73 I2C_CLK_BT0
73 I2C_DATA_BT1
73 I2C_CLK_BT1
74 I2C_DAT_CHARGE
74 I2C_CLK_CHARGE
R114 R115 0R2-PT5-LILY-GP
I2C_DAT_CHARGE_R
I2C_CLK_CHARGE_R
SMBUS port for charger
73 BAT_FET_HOT
26 -BATLOW
76 BATMON_EN
59,71 DISCHARGE
74 ISYS
R1395 0R2J-2-GP
ISYS_EC
74 -BOOST_MODE
F4 RESETI#
D4 32KHZ_IN
K5 EC_SCI#
N7 SMI#
L8 LPCPD#
L5 CLKRUN#
N5 SER_IRQ
M5 LRESET#
L6 LFRAME#
N6 PCI_CLK
M6 LAD0
M7 LAD1
L7 LAD2
K7 LAD3
K3 ADC0
K1 ADC1
L2 ADC2
M1 ADC3
K13 SMB0_DATA
H13 SMB0_CLK
K11 SMB1_DATA
J12 SMB1_CLK
F12 SMB2_DATA/PS2_CLK1B
E12 SMB2_CLK/PS2_DAT1B
L3 ADC11
M2 GPIO214/ADC12
M12 GPIO1/PWM4
L9 GPIO16/FAN_TACH3
J2 ADC8
N13 GPIO53/PWM0
MEC1619L-AJZP-GP
KSO0 C8 DRV0
KSO1 A6 DRV1
KSO2 E6 DRV2
KSO3 B6 DRV3
KSO4 A9 DRV4
KSO5 D12 DRV5
KSO6 N11 DRV6
KSO7 C9 DRV7
KSO8 C6 DRV8
KSO9 A5 DRV9
KSO10 B5 DRV10
KSO11 B8 DRV11
KSO12 A8 DRV12
KSO13 B1 DRV13
KSO14 G11 DRV14
KSO15 N12 DRV15
DRV[15..0] 63
SENSE[7..0] 63
KSI0 A7 SENSE0
KSI1 A4 SENSE1
KSI2 H3 SENSE2
KSI3 B9 SENSE3
KSI4 D9 SENSE4
KSI5 C10 SENSE5
KSI6 D6 SENSE6
KSI7 B7 SENSE7
GPIO164 E2 -HOTKEY 63
KBRST F1 -KBRC 29
A20M C7 KBGA20 29
VCC3M
VCC3B
R1388 20KR2J-L2-GP
R1389 10KR2J-3-GP
R1390 8K2R2J-3-GP
VCI_IN2# C2 -LPMODI_ON 74
VCI_IN1# G1 EC_#G1 63
VCI_IN0# D2 EC_#D2 63
PS2_CLK0A M13 IPDCLK_EC
PS2_DAT0A J13 IPDDATA_EC
R1393 33R2J-2-GP IPDCLK 63,64
R1394 33R2J-2-GP IPDDATA 63,64
C998 SC220P50V2JN-3GP
C999 SC220P50V2JN-3GP
R340 2K2R2J-2-GP
C1000 SCD1U10V2MX-3GP DY
R1396 100KR2J-1-GP
Place Near EC

<Variant Name>

緯創資通 **Wistron Corporation**
21F, 88, Sec.1, Hsin Tai Wu Rd., Hsichih,
Taipei Hsien 221, Taiwan, R.O.C.

Title	Embedded Controller (1/3)		
Size A2	Document Number Dasher-2		Rev -1
Date: Friday, March 09, 2012	Sheet 60	of	101

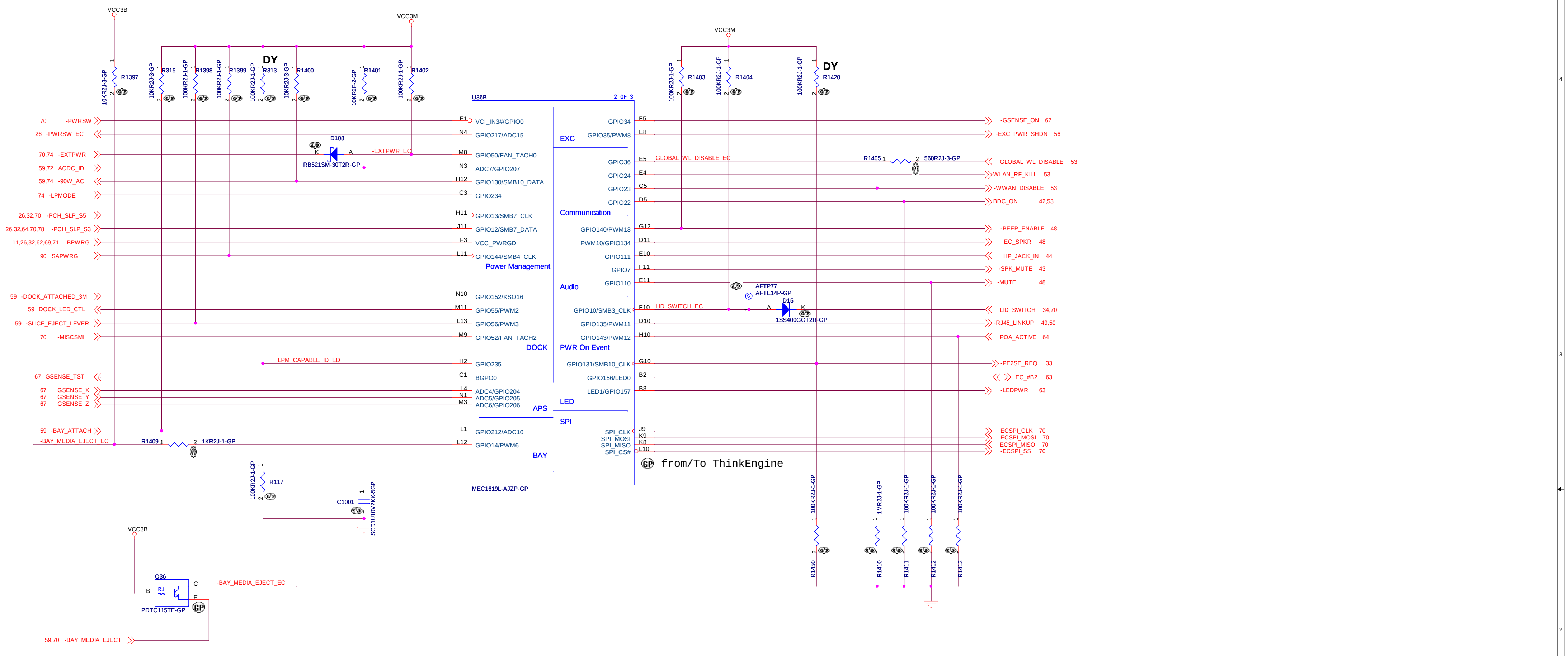
VCC3B
R1397
10KR2J-3-GP
VCC3M
R315
10KR2J-3-GP
R1398
100KR2J-1-GP
R1399
100KR2J-1-GP
DY
R313
100KR2J-1-GP
R1400
10KR2J-3-GP
R1401
10KR2F-2-GP
R1402
100KR2J-1-GP
70 -PWRSW
26 -PWRSW_EC
70,74 -EXTPWR
59,72 ACDC_ID
59,74 -90W_AC
74 -LPMODE
26,32,70 -PCH_SLP_S5
26,32,64,70,78 -PCH_SLP_S3
11,26,32,62,69,71 BPWRG
90 SAPWRG
59 -DOCK_ATTACHED_3M
59 DOCK_LED_CTL
59 -SLICE_EJECT_LEVER
70 -MISCSMI
LPM_CAPABLE_ID_ED
67 GSENSE_TST
67 GSENSE_X
67 GSENSE_Y
67 GSENSE_Z
59 -BAY_ATTACH
-BAY_MEDIA_EJECT_EC
R1409
1KR2J-1-GP
D108
K
A
RB521SM-30T2R-GP
-EXTPWR_EC
R117
100KR2J-1-GP
C1001
SCD1U10V2KX-5GP
U36B
2 0F 3
E1 VCI_IN3#/GPIO0
N4 GPIO217/ADC15
M8 GPIO50/FAN_TACH0
N3 ADC7/GPIO207
H12 GPIO130/SMB10_DATA
C3 GPIO234
H11 GPIO13/SMB7_CLK
J11 GPIO12/SMB7_DATA
F3 VCC_PWRGD
L11 GPIO144/SMB4_CLK
Power Management
N10 GPIO152/KSO16
M11 GPIO55/PWM2
L13 GPIO56/PWM3
M9 GPIO52/FAN_TACH2
DOCK
H2 GPIO235
C1 BGPO0
L4 ADC4/GPIO204
N1 ADC5/GPIO205
M3 ADC6/GPIO206
APS
L1 GPIO212/ADC10
L12 GPIO14/PWM6
BAY
EXC
GPIO34 F5
GPIO35/PWM8 E8
GPIO36 E5
GPIO24 E4
GPIO23 C5
GPIO22 D5
Communication
GPIO140/PWM13 G12
PWM10/GPIO134 D11
GPIO111 E10
GPIO7 F11
GPIO110 E11
Audio
GPIO10/SMB3_CLK F10
GPIO135/PWM11 D10
GPIO143/PWM12 H10
PWR On Event
GPIO131/SMB10_CLK G10
GPIO156/LED0 B2
LED1/GPIO157 B3
LED
SPI
SPI_CLK J9
SPI_MOSI K9
SPI_MISO K8
SPI_CS# L10
MEC1619L-AJZP-GP
from/To ThinkEngine
VCC3M
R1403
100KR2J-1-GP
R1404
100KR2J-1-GP
DY
R1420
100KR2J-1-GP
GLOBAL_WL_DISABLE_EC
R1405
560R2J-3-GP
LID_SWITCH_EC
AFTP77
AFTE14P-GP
D15
A
K
1SS400GGT2R-GP
-GSENSE_ON 67
-EXC_PWR_SHDN 56
GLOBAL_WL_DISABLE 53
WLAN_RF_KILL 53
-WWAN_DISABLE 53
BDC_ON 42,53
-BEEP_ENABLE 48
EC_SPKR 48
HP_JACK_IN 44
-SPK_MUTE 43
-MUTE 48
LID_SWITCH 34,70
-RJ45_LINKUP 49,50
POA_ACTIVE 64
-PE2SE_REQ 33
EC_#B2 63
-LEDPWR 63
ECSPI_CLK 70
ECSPI_MOSI 70
ECSPI_MISO 70
-ECSPI_SS 70
R1450
100KR2J-1-GP
R1410
1MR2J-1-GP
R1411
100KR2J-1-GP
R1412
100KR2J-1-GP
R1413
100KR2J-1-GP
VCC3B
Q36
B
R1
C
E
PDTC115TE-GP
-BAY_MEDIA_EJECT_EC
59,70 -BAY_MEDIA_EJECT

<Core Design>

緯創資通 **Wistron Corporation**
21F, 88, Sec.1, Hsin Tai Wu Rd., Hsichih,
Taipei Hsien 221, Taiwan, R.O.C.

Title **Embedded Controller (2/3)**

Size	Document Number	Rev
A2	**Dasher-2**	**-1**

Date: Friday, March 09, 2012 Sheet 61 of 101

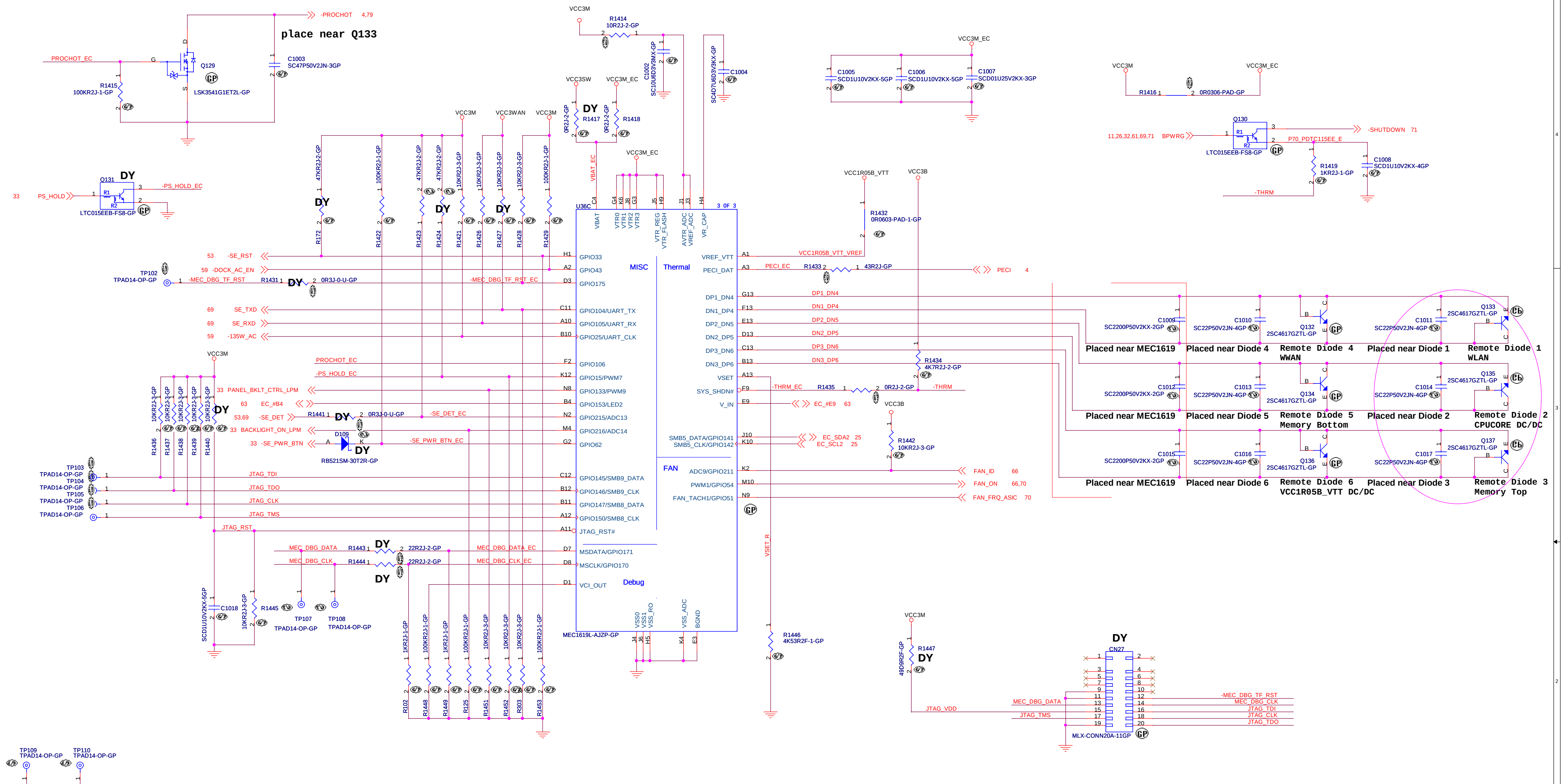
place near Q133
-PROCHOT 4,79
PROCHOT_EC
Q129
LSK3541G1ET2L-GP
C1003
SC47P50V2N-3GP
R1415
100KR2J-1-GP
Q131
LTC015EEB-FS8-GP
PS_HOLD
-PS_HOLD_EC
DY
VCC3M
VCC3WAN
VCC3SW
VCC3M_EC
R1414
10R2J-2-GP
C1002
SC10U6D3V3MX-GP
C1004
SC4D7U6D3V3KX-GP
R1417
R1418
0R2J-2-GP
VBAT_EC
C1005
SCD1U10V2KX-5GP
C1006
SCD1U10V2KX-5GP
C1007
SCD01U25V2KX-3GP
R1416
0R0306-PAD-GP
Q130
LTC015EEB-FS8-GP
BPWRG
-SHUTDOWN 71
P70_PDTC115EE_E
R1419
1KR2J-1-GP
C1008
SCD1U10V2KX-4GP
-THRM
VCC1R05B_VTT
VCC3B
R1432
0R0603-PAD-1-GP
U36C
3 OF 3
MISC
Thermal
FAN
Debug
GPIO33
GPIO43
GPIO175
GPIO104/UART_TX
GPIO105/UART_RX
GPIO25/UART_CLK
GPIO106
GPIO15/PWM7
GPIO133/PWM9
GPIO153/LED2
GPIO215/ADC13
GPIO216/ADC14
GPIO62
GPIO145/SMB9_DATA
GPIO146/SMB9_CLK
GPIO147/SMB8_DATA
GPIO150/SMB8_CLK
JTAG_RST#
MSDATA/GPIO171
MSCLK/GPIO170
VCI_OUT
VREF_VTT
PECI_DAT
DP1_DN4
DN1_DP4
DP2_DN5
DN2_DP5
DP3_DN6
DN3_DP6
VSET
SYS_SHDN#
V_IN
SMB5_DATA/GPIO141
SMB5_CLK/GPIO142
ADC9/GPIO211
PWM1/GPIO54
FAN_TACH1/GPIO51
MEC1619L-AJZP-GP
-SE_RST
-DOCK_AC_EN
-MEC_DBG_TF_RST
SE_TXD
SE_RXD
-135W_AC
PROCHOT_EC
-PS_HOLD_EC
PANEL_BKLT_CTRL_LPM
EC_#B4
-SE_DET
BACKLIGHT_ON_LPM
-SE_PWR_BTN
JTAG_TDI
JTAG_TDO
JTAG_CLK
JTAG_TMS
JTAG_RST
MEC_DBG_DATA
MEC_DBG_CLK
TP102
TPAD14-OP-GP
R1431
0R3J-0-U-GP
R1441
D109
RB521SM-30T2R-GP
TP103
TP104
TP105
TP106
C1018
SCD1U10V2KX-5GP
R1445
10KR2J-3-GP
TP107
TP108
R1443
R1444
22R2J-2-GP
VCC1R05B_VTT_VREF
PECI_EC
R1433
43R2J-GP
PECI 4
R1434
4K7R2J-2-GP
-THRM_EC
R1435
0R2J-2-GP
EC_#E9 63
EC_SDA2 25
EC_SCL2 25
R1442
10KR2J-3-GP
FAN_ID 66
FAN_ON 66,70
FAN_FRQ_ASIC 70
VSET_R
R1446
4K53R2F-1-GP
R1447
49D9R2F-GP
C1009
C1012
C1015
SC2200P50V2KX-2GP
C1010
C1013
C1016
SC22P50V2N-4GP
Q132
Q134
Q136
2SC4617GZTL-GP
C1011
C1014
C1017
Q133
Q135
Q137
Placed near MEC1619
Placed near Diode 4
Remote Diode 4
WWAN
Placed near Diode 1
Remote Diode 1
WLAN
Placed near Diode 5
Remote Diode 5
Memory Bottom
Placed near Diode 2
Remote Diode 2
CPUCORE DC/DC
Placed near Diode 6
Remote Diode 6
VCC1R05B_VTT DC/DC
Placed near Diode 3
Remote Diode 3
Memory Top
CN27
MLX-CONN20A-11GP
-MEC_DBG_TF_RST
MEC_DBG_CLK
JTAG_TDI
JTAG_CLK
JTAG_TDO
JTAG_VDD
TP109
TP110
TPAD14-OP-GP
R102
R1448
R1449
R125
R1451
R1452
R303
R1453
R172
R1422
R1423
R1424
R1421
R1426
R1427
R1428
R1429
R1436
R1437
R1438
R1439
R1440

JTAG debug port		
	Enable	Disable
R1440	ASM	DY
R1445	DY	ASM
R1447	ASm	DY

Trace FIFO debug port		
	Enable	Disable
R1443	ASM	DY
R1444	ASM	DY
R102	DY	ASM

<Variant Name>

緯創資通 **Wistron Corporation**
21F, 88, Sec.1, Hsin Tai Wu Rd., Hsichih,
Taipei Hsien 221, Taiwan, R.O.C.

Title **Embedded Controller (3/3)**

Size A2 | Document Number **Dasher-2** | Rev -1

Date: Friday, March 09, 2012 | Sheet 62 of 101

Keyboard Connector

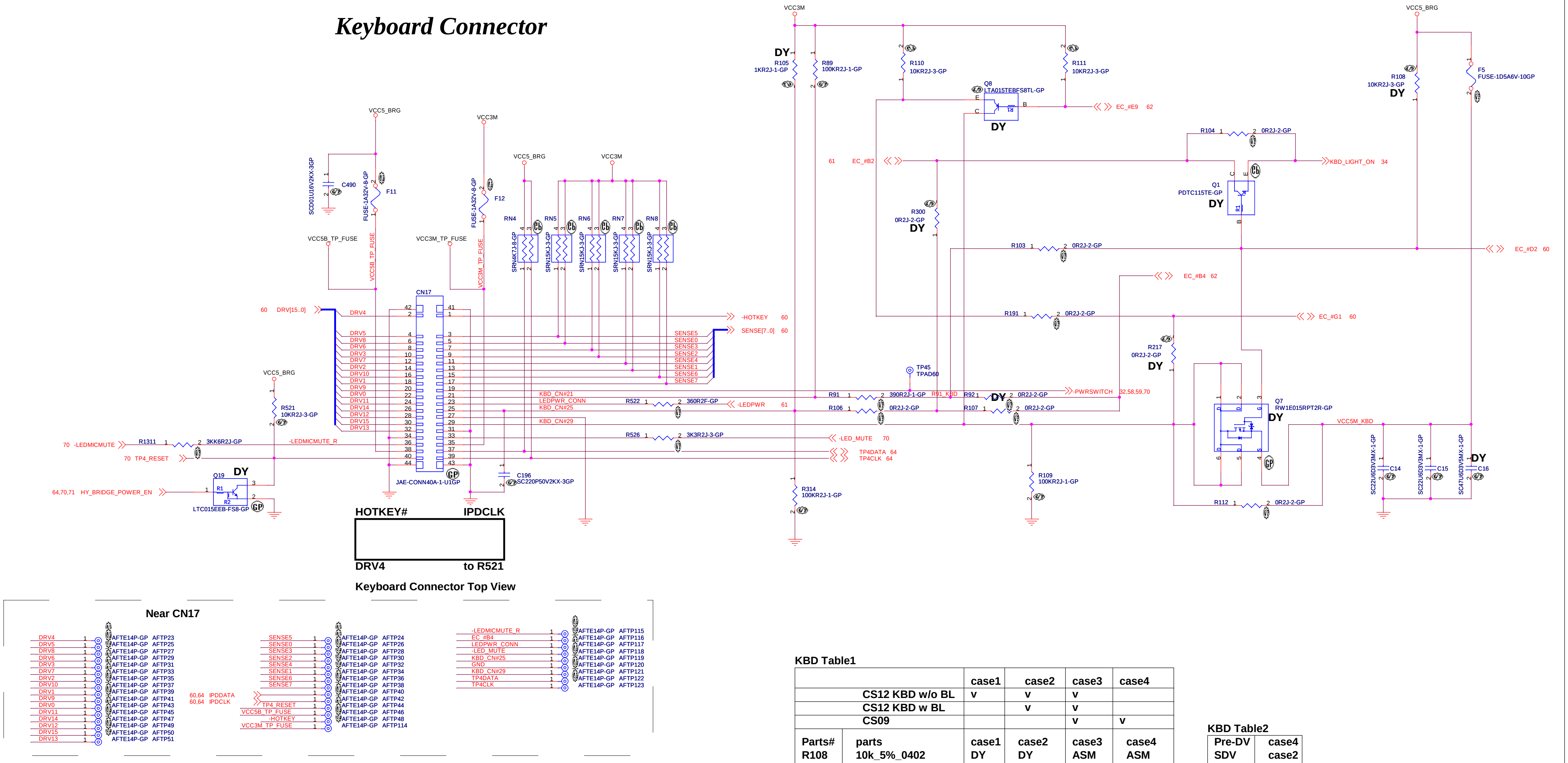
VCC3M
VCC5_BRG
DY
R105 1KR2J-1-GP
R89 100KR2J-1-GP
R110 10KR2J-3-GP
R111 10KR2J-3-GP
Q8 LTA015TEBFS8TL-GP
EC_#E9 62
R108 10KR2J-3-GP
F5 FUSE-1D5A6V-10GP
R104 0R2J-2-GP
KBD_LIGHT_ON 34
61 EC_#B2
Q1 PDTC115TE-GP
R300 0R2J-2-GP
R103 0R2J-2-GP
EC_#D2 60
EC_#B4 62
R191 0R2J-2-GP
EC_#G1 60
R217 0R2J-2-GP
TP45 TPAD60
R91 390R2J-1-GP
R91_KBD
R92 0R2J-2-GP
-PWRSWITCH 32,58,59,70
R106 0R2J-2-GP
R107 0R2J-2-GP
Q7 RW1E015RPT2R-GP
VCC5M_KBD
C14 SC22U6D3V3MX-1-GP
C15 SC22U6D3V3MX-1-GP
C16 SC47U6D3V5MX-1-GP
R109 100KR2J-1-GP
R314 100KR2J-1-GP
R112 0R2J-2-GP
C490 SCD01U16V2KX-3GP
F11 FUSE-1A32V-8-GP
F12 FUSE-1A32V-8-GP
VCC5B_TP_FUSE
VCC3M_TP_FUSE
RN4 SRN4K7J-8-GP
RN5 SRN15KJ-3-GP
RN6 SRN15KJ-3-GP
RN7 SRN15KJ-3-GP
RN8 SRN15KJ-3-GP
CN17 JAE-CONN40A-1-U1GP
60 DRV[15..0]
DRV4 DRV5 DRV8 DRV6 DRV3 DRV7 DRV2 DRV10 DRV1 DRV9 DRV0 DRV11 DRV14 DRV12 DRV15 DRV13
SENSE5 SENSE0 SENSE3 SENSE2 SENSE4 SENSE1 SENSE6 SENSE7
-HOTKEY 60
SENSE[7..0] 60
KBD_CN#21
LEDPWR_CONN
KBD_CN#25
KBD_CN#29
R522 360R2F-GP
-LEDPWR 61
R526 3K3R2J-3-GP
-LED_MUTE 70
TP4DATA 64
TP4CLK 64
C196 SC220P50V2KX-3GP
R521 10KR2J-3-GP
R1311 3KK6R2J-3-GP
70 -LEDMICMUTE
-LEDMICMUTE_R
70 TP4_RESET
Q19 LTC015EEB-FS8-GP
64,70,71 HY_BRIDGE_POWER_EN
HOTKEY#
IPDCLK
DRV4
to R521
Keyboard Connector Top View
Near CN17
AFTE14P-GP
AFTP23 – AFTP51
AFTP24 – AFTP114
AFTP115 – AFTP123
60,64 IPDDATA
60,64 IPDCLK
TP4_RESET
VCC5B_TP_FUSE
-HOTKEY
VCC3M_TP_FUSE
-LEDMICMUTE_R
EC_#B4
LEDPWR_CONN
-LED_MUTE
KBD_CN#25
GND
KBD_CN#29
TP4DATA
TP4CLK

KBD Table1

	case1	case2	case3	case4
CS12 KBD w/o BL	v	v	v	
CS12 KBD w BL		v	v	
CS09			v	v

Parts#	parts	case1	case2	case3	case4
R108	10k_5%_0402	DY	DY	ASM	ASM
R104	0_5%_0402	ASM	ASM	DY	DY
R89	100k_5%_0402	ASM	ASM	ASM	ASM
R105	1k_5%_0402	ASM	DY	ASM	ASM
R111	10k_5%_0402	ASM	ASM	ASM	ASM
R110	10k_5%_0402	DY	ASM	ASM	ASM
R92	0_5%_0402	DY	DY	ASM	ASM
R91	390_5%_0402	DY	ASM	ASM	ASM
R107	0_5%_0402	DY	ASM	DY	DY
R103	0_5%_0402	ASM	ASM	DY	DY
R106	0_5%_0402	DY	ASM	ASM	ASM
R112	0_5%_0402	DY	ASM	DY	DY
R109	100k_5%_0402	DY	ASM	ASM	DY
R191	0_5%_0402	ASM	ASM	DY	ASM
R217	0_5%_0402	DY	DY	ASM	DY
R300	0_5%_0402	DY	DY	ASM	ASM
C16	47uF_6.3V_0805	DY	DY	DY	DY
C15	10uF_6.3V_0603	DY	ASM	ASM	DY
C14	10uF_6.3V_0603	DY	ASM	ASM	DY
Q1	LTC015TE	DY	DY	ASM	ASM
Q8	LTA015TE	DY	DY	ASM	DY
Q7	RW1E015RP	DY	DY	ASM	DY
F5	1.5A/6A Fuse	DY	ASM	DY	DY
	1.5A/6V PolySW	DY	DY	ASM	DY
R314	100K_5%_0402	DY	ASM	DY	DY

KBD Table2

Pre-DV	case4
SDV	case2
FVT	case2
PreSIT	case2
SIT	case2

← Logic

<Core Design>

緯創資通 **Wistron Corporation**
21F, 88, Sec.1, Hsin Tai Wu Rd., Hsichih,
Taipei Hsien 221, Taiwan, R.O.C.

Title
KEYBOARD CONNECTOR

Size A2 | Document Number **Dasher-2** | Rev **-1**

Date: Friday, March 09, 2012 | Sheet 63 of 101

Fingerprint Reader / Touch PAD

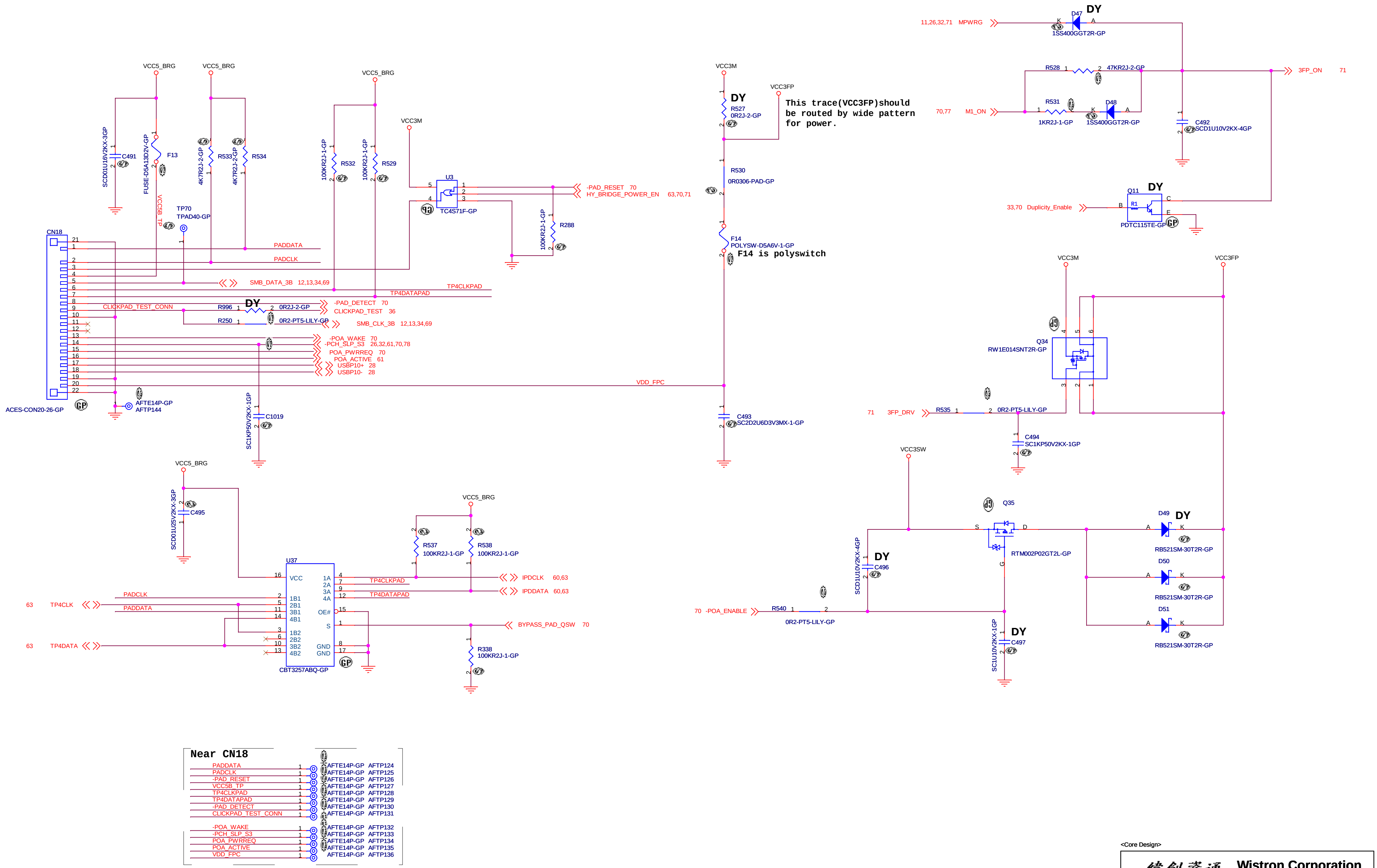

DY
D47
K
A
1SS400GGT2R-GP
11,26,32,71 MPWRG
R528 1 2 47KR2J-2-GP
3FP_ON 71
70,77 M1_ON
R531
1KR2J-1-GP
D48
1SS400GGT2R-GP
C492
SCD1U10V2KX-4GP
VCC3M
DY
R527
0R2J-2-GP
VCC3FP
This trace(VCC3FP)should
be routed by wide pattern
for power.
R530
0R0306-PAD-GP
F14
POLYSW-D5A6V-1-GP
F14 is polyswitch
Q11
DY
R1
B
C
E
PDTC115TE-GP
33,70 Duplicity_Enable
VCC5_BRG
VCC5_BRG
VCC5_BRG
VCC3M
SCD01U16V2KX-3GP
C491
FUSE-D5A13D2V-GP
F13
VCC5B_TP
4K7R2J-2-GP
R533
4K7R2J-2-GP
R534
100KR2J-1-GP
R532
100KR2J-1-GP
R529
U3
TC4S71F-GP
-PAD_RESET 70
HY_BRIDGE_POWER_EN 63,70,71
100KR2J-1-GP
R288
TP70
TPAD40-GP
CN18
ACES-CON20-26-GP
PADDATA
PADCLK
SMB_DATA_3B 12,13,34,69
TP4CLKPAD
TP4DATAPAD
CLICKPAD_TEST_CONN
R996
DY
0R2J-2-GP
-PAD_DETECT 70
CLICKPAD_TEST 36
R250
0R2-PT5-LILY-GP
SMB_CLK_3B 12,13,34,69
-POA_WAKE 70
-PCH_SLP_S3 26,32,61,70,78
POA_PWRREQ 70
POA_ACTIVE 61
USBP10+ 28
USBP10- 28
VDD_FPC
AFTE14P-GP
AFTP144
SC1KP50V2KX-1GP
C1019
C493
SC2D2U6D3V3MX-1-GP
VCC3M
VCC3FP
Q34
RW1E014SNT2R-GP
71 3FP_DRV
R535
0R2-PT5-LILY-GP
C494
SC1KP50V2KX-1GP
VCC3SW
Q35
S
D
G
RTM002P02GT2L-GP
SCD1U10V2KX-4GP
DY
C496
70 -POA_ENABLE
R540
0R2-PT5-LILY-GP
DY
SC1U10V2KX-1GP
C497
D49
DY
A
K
RB521SM-30T2R-GP
D50
RB521SM-30T2R-GP
D51
RB521SM-30T2R-GP
VCC5_BRG
SCD01U25V2KX-3GP
C495
U37
VCC
1A
2A
3A
4A
1B1
2B1
3B1
4B1
OE#
S
1B2
2B2
3B2
4B2
GND
GND
CBT3257ABQ-GP
VCC5_BRG
R537
100KR2J-1-GP
R538
100KR2J-1-GP
TP4CLKPAD
TP4DATAPAD
IPDCLK 60,63
IPDDATA 60,63
PADCLK
PADDATA
63 TP4CLK
63 TP4DATA
BYPASS_PAD_QSW 70
R338
100KR2J-1-GP
Near CN18
PADDATA
PADCLK
-PAD_RESET
VCC5B_TP
TP4CLKPAD
TP4DATAPAD
-PAD_DETECT
CLICKPAD_TEST_CONN
-POA_WAKE
-PCH_SLP_S3
POA_PWRREQ
POA_ACTIVE
VDD_FPC
AFTE14P-GP AFTP124
AFTE14P-GP AFTP125
AFTE14P-GP AFTP126
AFTE14P-GP AFTP127
AFTE14P-GP AFTP128
AFTE14P-GP AFTP129
AFTE14P-GP AFTP130
AFTE14P-GP AFTP131
AFTE14P-GP AFTP132
AFTE14P-GP AFTP133
AFTE14P-GP AFTP134
AFTE14P-GP AFTP135
AFTE14P-GP AFTP136

<Core Design>

緯創資通 **Wistron Corporation**
21F, 88, Sec.1, Hsin Tai Wu Rd., Hsichih,
Taipei Hsien 221, Taiwan, R.O.C.

Title
TOUCH PAD CONNECTOR

Size Custom | Document Number **Dasher-2** | Rev -1

Date: Friday, March 09, 2012 | Sheet 64 of 101

BLANK

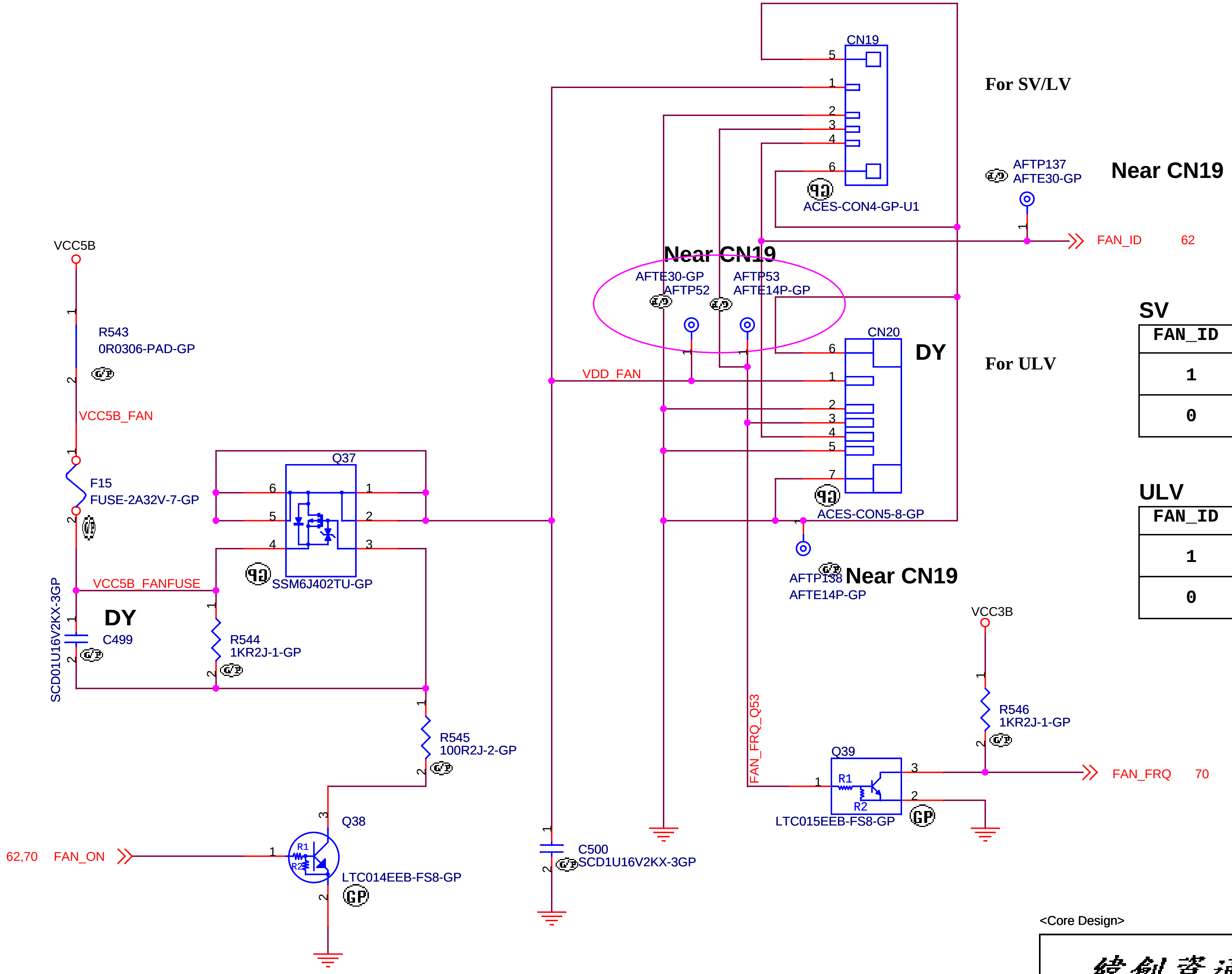
CN19
5
1
2
3
4
6
ACES-CON4-GP-U1
For SV/LV
AFTP137
AFTE30-GP
Near CN19
1
FAN_ID
62
VCC5B
1
R543
0R0306-PAD-GP
2
VCC5B_FAN
Near CN19
AFTE30-GP
AFTP52
AFTP53
AFTE14P-GP
1
1
CN20
6
1
2
3
4
5
7
DY
For ULV
VDD_FAN
ACES-CON5-8-GP
AFTP138
AFTE14P-GP
Near CN19
1
F15
FUSE-2A32V-7-GP
2
Q37
6
5
4
1
2
3
SSM6J402TU-GP
VCC5B_FANFUSE
SCD01U16V2KX-3GP
1
DY
C499
2
1
R544
1KR2J-1-GP
2
1
R545
100R2J-2-GP
2
3
Q38
1
R1
R2
LTC014EEB-FS8-GP
2
62,70
FAN_ON
1
C500
SCD1U16V2KX-3GP
2
FAN_FRQ_Q53
Q39
1
R1
R2
LTC015EEB-FS8-GP
3
2
VCC3B
1
R546
1KR2J-1-GP
2
FAN_FRQ
70
GP

SV

FAN_ID	Thermal module
1	DELTA or Toshiba
0	AVC

ULV

FAN_ID	Thermal module
1	Toshiba
0	AVC or DELTA

<Core Design>

緯創資通 **Wistron Corporation**
21F, 88, Sec.1, Hsin Tai Wu Rd., Hsichih,
Taipei Hsien 221, Taiwan, R.O.C.

Title	***FAN Control***	
Size A4	Document Number **Dasher-2**	Rev **-1**
Date: Friday, March 09, 2012	Sheet 66 of 101	

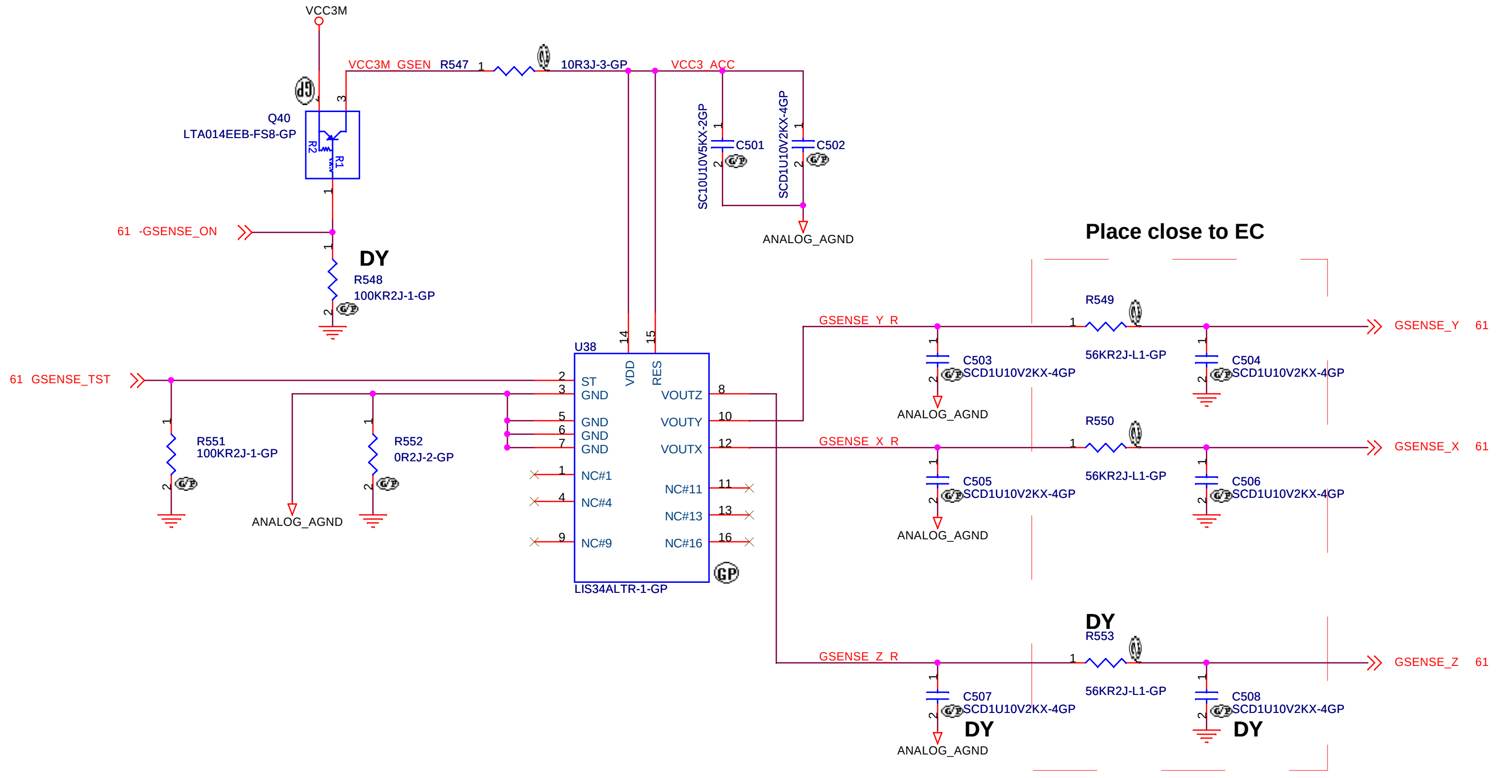
VCC3M
VCC3M_GSEN
R547
10R3J-3-GP
VCC3_ACC
Q40
LTA014EEB-FS8-GP
R1
R2
SC10U10V5KX-2GP
C501
SCD1U10V2KX-4GP
C502
ANALOG_AGND
61 -GSENSE_ON
DY
R548
100KR2J-1-GP
Place close to EC
U38
VDD
RES
ST
GND
GND
GND
GND
NC#1
NC#4
NC#9
VOUTZ
VOUTY
VOUTX
NC#11
NC#13
NC#16
LIS34ALTR-1-GP
61 GSENSE_TST
R551
100KR2J-1-GP
R552
0R2J-2-GP
ANALOG_AGND
GSENSE_Y_R
R549
56KR2J-L1-GP
C503
SCD1U10V2KX-4GP
C504
SCD1U10V2KX-4GP
GSENSE_Y 61
GSENSE_X_R
R550
56KR2J-L1-GP
C505
SCD1U10V2KX-4GP
C506
SCD1U10V2KX-4GP
GSENSE_X 61
DY
R553
GSENSE_Z_R
56KR2J-L1-GP
C507
SCD1U10V2KX-4GP
C508
SCD1U10V2KX-4GP
GSENSE_Z 61
DY
DY
ANALOG_AGND

Width = 6 mil & Spacing = 10 mil
for three Output traces

U38

Primary	**STMicro LIS34AL**	**41R0828AA**
Second	**Kionix KXTC8-2850**	**74.KXTC8.0BZ**
Third		

Layout Comment :

(1) Avoid routing under DCDC switching area.

<Core Design>

緯創資通 **Wistron Corporation**
21F, 88, Sec.1, Hsin Tai Wu Rd., Hsichih,
Taipei Hsien 221, Taiwan, R.O.C.

Title
G-SENSOR

Size A3
Document Number **Dasher-2**
Rev **-1**

Date: Friday, March 09, 2012
Sheet 67 of 101

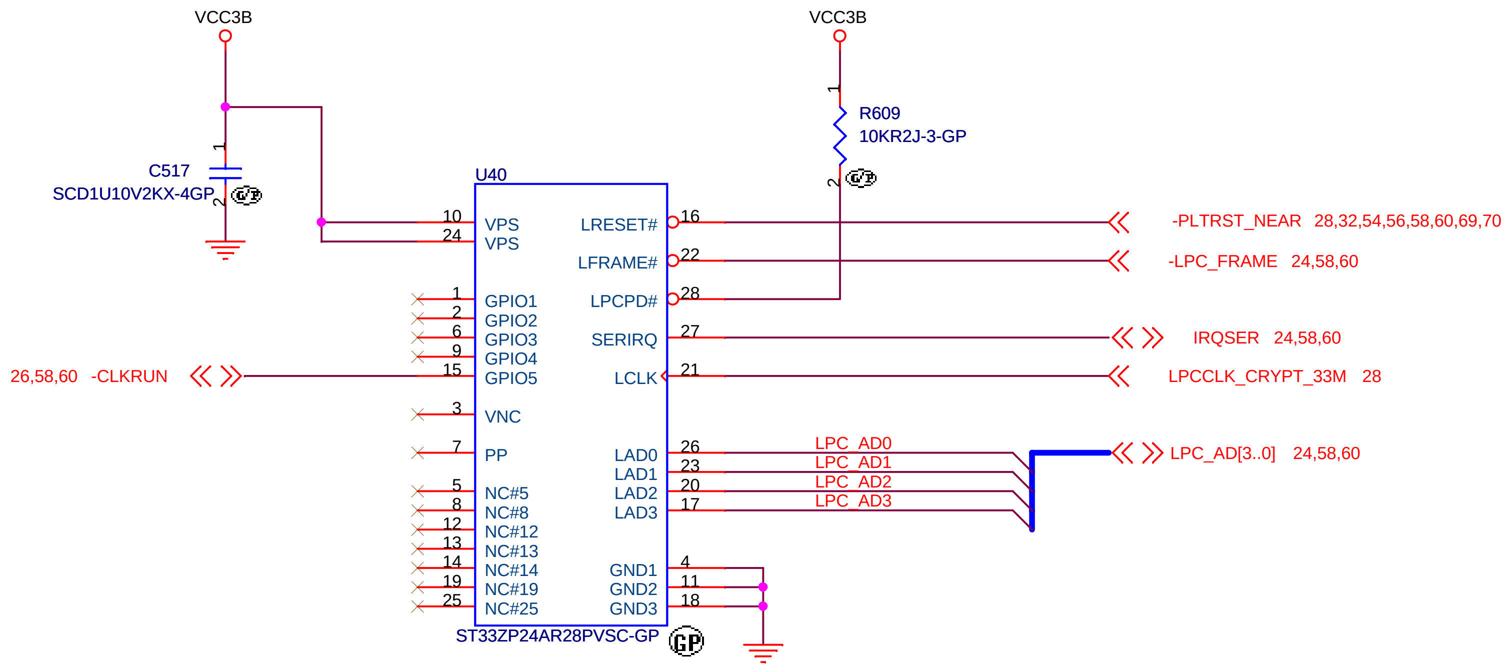
VCC3B
VCC3B
R609
10KR2J-3-GP
1
2
C517
SCD1U10V2KX-4GP
1
2
U40
10 VPS
24 VPS
1 GPIO1
2 GPIO2
6 GPIO3
9 GPIO4
15 GPIO5
3 VNC
7 PP
5 NC#5
8 NC#8
12 NC#12
13 NC#13
14 NC#14
19 NC#19
25 NC#25
LRESET# 16
LFRAME# 22
LPCPD# 28
SERIRQ 27
LCLK 21
LAD0 26
LAD1 23
LAD2 20
LAD3 17
GND1 4
GND2 11
GND3 18
ST33ZP24AR28PVSC-GP
GP
26,58,60 -CLKRUN
-PLTRST_NEAR 28,32,54,56,58,60,69,70
-LPC_FRAME 24,58,60
IRQSER 24,58,60
LPCCLK_CRYPT_33M 28
LPC_AD0
LPC_AD1
LPC_AD2
LPC_AD3
LPC_AD[3..0] 24,58,60

BU	After SDV
ST19NP18ER28PVMO (71.19N18.T0W)	ST33ZP24AR28PVxx xx="OG" for SDV(71.03324.A0W), "RC" for FVT, PreSIT (FW 1.2.C.0)(71.03324.C0W) SC for SIT (not PreSIT) FW 1.2.D.0(71.03324.D0W)

<Core Design>

緯創資通 **Wistron Corporation**
21F, 88, Sec.1, Hsin Tai Wu Rd., Hsichih,
Taipei Hsien 221, Taiwan, R.O.C.

Title
TPM

Size A4
Document Number **Dasher-2**
Rev **-1**

Date: Friday, March 09, 2012
Sheet 68 of 101

EEPROM

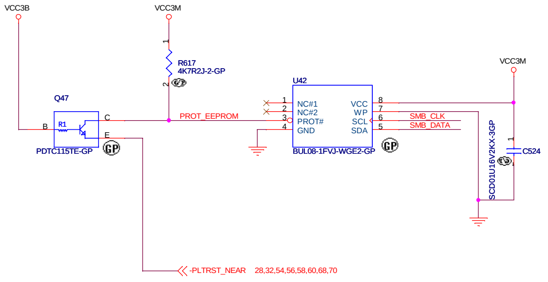
VCC3B
VCC3M
R617
4K7R2J-2-GP
Q47
R1
B
C
E
PDTC115TE-GP
PROT_EEPROM
U42
NC#1
NC#2
PROT#
GND
VCC
WP
SCL
SDA
BUL08-1FVJ-WGE2-GP
SMB_CLK
SMB_DATA
VCC3M
SCD01U16V2KX-3GP
C524
-PLTRST_NEAR
28,32,54,56,58,60,68,70

	Vendor	U42	Part Number
1st	ROHM	BUL08-1FVJ-W	72.BUL08.A0Q
2nd	NXP	PCA24S08ADP	72.24S08.A0Q
3rd	Sanyo	LE26CAP08TT	72.26C08.00R

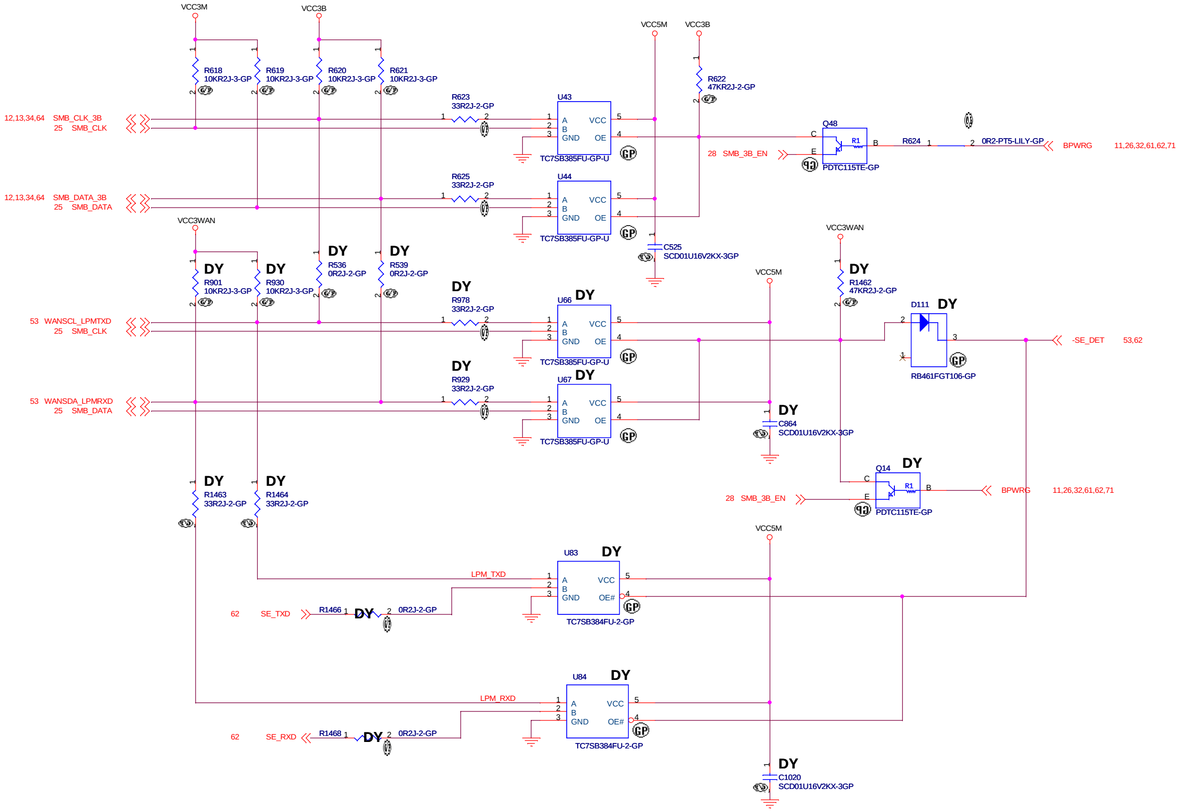
VCC3M
VCC3B
R618
10KR2J-3-GP
R619
10KR2J-3-GP
R620
10KR2J-3-GP
R621
10KR2J-3-GP
VCC5M
VCC3B
R622
47KR2J-2-GP
R623
33R2J-2-GP
U43
A
B
GND
VCC
OE
TC7SB385FU-GP-U
12,13,34,64 SMB_CLK_3B
25 SMB_CLK
Q48
R1
PDTC115TE-GP
R624
0R2-PT5-LILY-GP
BPWRG
11,26,32,61,62,71
28 SMB_3B_EN
R625
33R2J-2-GP
U44
TC7SB385FU-GP-U
12,13,34,64 SMB_DATA_3B
25 SMB_DATA
C525
SCD01U16V2KX-3GP
VCC3WAN
DY
R901
10KR2J-3-GP
R930
10KR2J-3-GP
R536
0R2J-2-GP
R539
0R2J-2-GP
R978
33R2J-2-GP
U66
TC7SB385FU-GP-U
53 WANSCL_LPMTXD
25 SMB_CLK
VCC5M
VCC3WAN
R1462
47KR2J-2-GP
D111
RB461FGT106-GP
-SE_DET
53,62
R929
33R2J-2-GP
U67
TC7SB385FU-GP-U
53 WANSDA_LPMRXD
25 SMB_DATA
C864
SCD01U16V2KX-3GP
R1463
33R2J-2-GP
R1464
33R2J-2-GP
Q14
PDTC115TE-GP
BPWRG
11,26,32,61,62,71
28 SMB_3B_EN
VCC5M
U83
LPM_TXD
OE#
TC7SB384FU-2-GP
62 SE_TXD
R1466
0R2J-2-GP
U84
LPM_RXD
TC7SB384FU-2-GP
62 SE_RXD
R1468
0R2J-2-GP
C1020
SCD01U16V2KX-3GP

<Core Design>

緯創資通 **Wistron Corporation**
21F, 88, Sec.1, Hsin Tai Wu Rd., Hsichih,
Taipei Hsien 221, Taiwan, R.O.C.

Title
EEPROM/SMBUS SW

Size Custom
Document Number **Dasher-2**
Rev -1

Date: Friday, March 09, 2012
Sheet 69 of 101

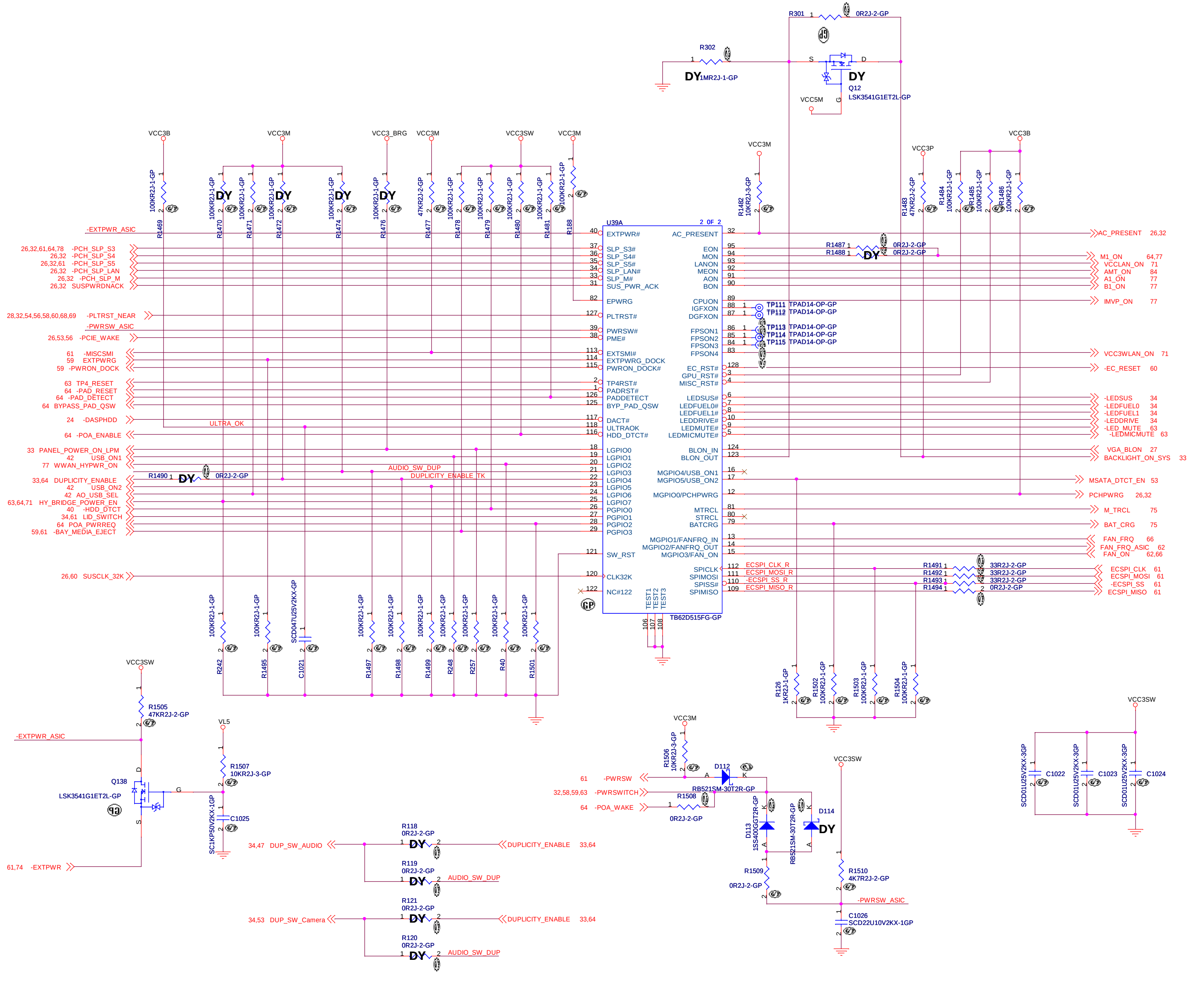
R301
0R2J-2-GP
R302
DY
1MR2J-1-GP
S
D
G
DY
Q12
LSK3541G1ET2L-GP
VCC5M
VCC3B
VCC3M
VCC3_BRG
VCC3M
VCC3SW
VCC3M
VCC3M
VCC3P
VCC3B
100KR2J-1-GP
47KR2J-2-GP
10KR2J-3-GP
R1469
R1470
R1471
R1472
R1474
R1476
R1477
R1478
R1479
R1480
R1481
R188
R1482
R1483
R1484
R1485
R1486
U39A
2 OF 2
-EXTPWR_ASIC
26,32,61,64,78 -PCH_SLP_S3
26,32 -PCH_SLP_S4
26,32,61 -PCH_SLP_S5
26,32 -PCH_SLP_LAN
26,32 -PCH_SLP_M
26,32 SUSPWRDNACK
28,32,54,56,58,60,68,69 -PLTRST_NEAR
-PWRSW_ASIC
26,53,56 -PCIE_WAKE
61 -MISCSMI
59 EXTPWRG
59 -PWRON_DOCK
63 TP4_RESET
64 -PAD_RESET
64 -PAD_DETECT
64 BYPASS_PAD_QSW
24 -DASPHDD
ULTRA_OK
64 -POA_ENABLE
33 PANEL_POWER_ON_LPM
42 USB_ON1
77 WWAN_HYPWR_ON
R1490
DY
0R2J-2-GP
AUDIO_SW_DUP
DUPLICITY_ENABLE_TK
33,64 DUPLICITY_ENABLE
42 USB_ON2
42 AO_USB_SEL
63,64,71 HY_BRIDGE_POWER_EN
40 -HDD_DTCT
34,61 LID_SWITCH
64 POA_PWRREQ
59,61 -BAY_MEDIA_EJECT
26,60 SUSCLK_32K
EXTPWR#
SLP_S3#
SLP_S4#
SLP_S5#
SLP_LAN#
SLP_M#
SUS_PWR_ACK
EPWRG
PLTRST#
PWRSW#
PME#
EXTSMI#
EXTPWRG_DOCK
PWRON_DOCK#
TP4RST#
PADRST#
PADDETECT
BYP_PAD_QSW
DACT#
ULTRAOK
HDD_DTCT#
LGPIO0
LGPIO1
LGPIO2
LGPIO3
LGPIO4
LGPIO5
LGPIO6
LGPIO7
PGPIO0
PGPIO1
PGPIO2
PGPIO3
SW_RST
CLK32K
NC#122
TEST1
TEST2
TEST3
TB62D515FG-GP
AC_PRESENT
EON
MON
LANON
MEON
AON
BON
CPUON
IGFXON
DGFXON
FPSON1
FPSON2
FPSON3
FPSON4
EC_RST#
GPU_RST#
MISC_RST#
LEDSUS#
LEDFUEL0#
LEDFUEL1#
LEDDRIVE#
LEDMUTE#
LEDMICMUTE#
BLON_IN
BLON_OUT
MGPIO4/USB_ON1
MGPIO5/USB_ON2
MGPIO0/PCHPWRG
MTRCL
STRCL
BATCRG
MGPIO1/FANFRQ_IN
MGPIO2/FANFRQ_OUT
MGPIO3/FAN_ON
SPICLK
SPIMOSI
SPISS#
SPIMISO
R1487
R1488
DY
0R2J-2-GP
TP111 TPAD14-OP-GP
TP112 TPAD14-OP-GP
TP113 TPAD14-OP-GP
TP114 TPAD14-OP-GP
TP115 TPAD14-OP-GP
AC_PRESENT 26,32
M1_ON 64,77
VCCLAN_ON 71
AMT_ON 84
A1_ON 77
B1_ON 77
IMVP_ON 77
VCC3WLAN_ON 71
-EC_RESET 60
-LEDSUS 34
-LEDFUEL0 34
-LEDFUEL1 34
-LEDDRIVE 34
-LED_MUTE 63
-LEDMICMUTE 63
VGA_BLON 27
BACKLIGHT_ON_SYS 33
MSATA_DTCT_EN 53
PCHPWRG 26,32
M_TRCL 75
BAT_CRG 75
FAN_FRQ 66
FAN_FRQ_ASIC 62
FAN_ON 62,66
ECSPI_CLK_R
ECSPI_MOSI_R
-ECSPI_SS_R
ECSPI_MISO_R
R1491
R1492
R1493
R1494
33R2J-2-GP
0R2J-2-GP
ECSPI_CLK 61
ECSPI_MOSI 61
-ECSPI_SS 61
ECSPI_MISO 61
R242
R1495
C1021
SCD047U25V2KX-GP
R1497
R1498
R1499
R248
R257
R40
R1501
R126
1KR2J-1-GP
R1502
R1503
R1504
VCC3SW
R1505
47KR2J-2-GP
-EXTPWR_ASIC
Q138
LSK3541G1ET2L-GP
VL5
R1507
10KR2J-3-GP
C1025
SC1KP50V2KX-1GP
61,74 -EXTPWR
34,47 DUP_SW_AUDIO
R118
0R2J-2-GP
DY
DUPLICITY_ENABLE 33,64
R119
0R2J-2-GP
DY
AUDIO_SW_DUP
34,53 DUP_SW_Camera
R121
0R2J-2-GP
DY
DUPLICITY_ENABLE 33,64
R120
0R2J-2-GP
DY
AUDIO_SW_DUP
VCC3M
R1506
10KR2J-3-GP
D112
RB521SM-30T2R-GP
61 -PWRSW
32,58,59,63 -PWRSWITCH
64 -POA_WAKE
R1508
0R2J-2-GP
D113
1SS400GPT2R-GP
RB521SM-30T2R-GP
D114
DY
R1509
0R2J-2-GP
VCC3SW
R1510
4K7R2J-2-GP
-PWRSW_ASIC
C1026
SCD22U10V2KX-1GP
VCC3SW
SCD01U25V2KX-3GP
C1022
C1023
C1024
A
B
C
D
E
1
2
3
4

<Core Design>

緯創資通 **Wistron Corporation**
21F, 88, Sec.1, Hsin Tai Wu Rd., Hsichih,
Taipei Hsien 221, Taiwan, R.O.C.

Title	**Think Engine 1/2**		
Size A2	Document Number **Dasher-2**		Rev -1
Date: Friday, March 09, 2012		Sheet 70 of 101	

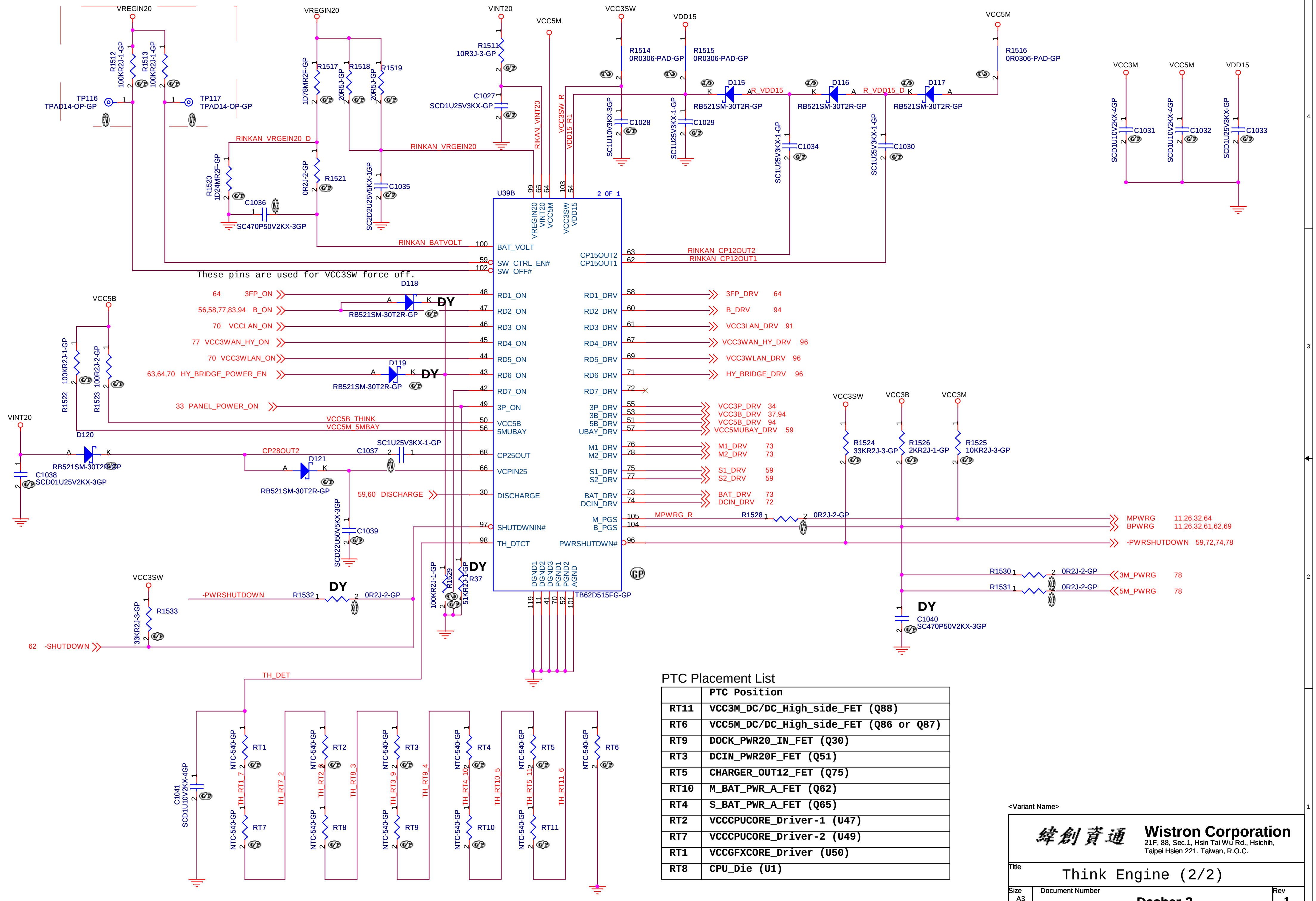
VREGIN20
R1512 100KR2J-1-GP
R1513 100KR2J-1-GP
TP116 TPAD14-OP-GP
TP117 TPAD14-OP-GP
R1517 1D78MR2F-GP
R1518 20R5J-GP
R1519 20R5J-GP
VINT20
R1511 10R3J-3-GP
C1027 SCD1U25V3KX-GP
VCC5M
VCC3SW
VDD15
R1514 0R0306-PAD-GP
R1515 0R0306-PAD-GP
R1516 0R0306-PAD-GP
D115 RB521SM-30T2R-GP
D116 RB521SM-30T2R-GP
D117 RB521SM-30T2R-GP
R_VDD15
R_VDD15_D
C1028 SC1U10V3KX-GP
C1029 SC1U25V3KX-1-GP
C1034 SC1U25V3KX-1-GP
C1030 SC1U25V3KX-1-GP
VCC3M
C1031 SCD1U10V2KX-4GP
C1032 SCD1U10V2KX-4GP
C1033 SCD1U25V3KX-GP
RINKAN_VRGEIN20_D
RINKAN_VRGEIN20
RINKAN_VINT20
VCC3SW_R
VDD15_R1
R1520 1D24MR2F-GP
R1521 0R2J-2-GP
C1035 SC2D2U25V5KX-1GP
C1036 SC470P50V2KX-3GP
U39B
2 OF 1
VREGIN20
VINT20
VCC5M
VCC3SW
VDD15
RINKAN_BATVOLT
BAT_VOLT
SW_CTRL_EN#
SW_OFF#
These pins are used for VCC3SW force off.
CP15OUT2
CP15OUT1
RINKAN_CP12OUT2
RINKAN_CP12OUT1
D118 RB521SM-30T2R-GP
DY
64 3FP_ON
56,58,77,83,94 B_ON
70 VCCLAN_ON
77 VCC3WAN_HY_ON
70 VCC3WLAN_ON
63,64,70 HY_BRIDGE_POWER_EN
D119 RB521SM-30T2R-GP
33 PANEL_POWER_ON
VCC5B
R1522 100KR2J-1-GP
R1523 100R2J-2-GP
VCC5B_THINK
VCC5M_5MBAY
RD1_ON
RD2_ON
RD3_ON
RD4_ON
RD5_ON
RD6_ON
RD7_ON
3P_ON
VCC5B
5MUBAY
CP25OUT
VCPIN25
DISCHARGE
SHUTDWNIN#
TH_DTCT
RD1_DRV
RD2_DRV
RD3_DRV
RD4_DRV
RD5_DRV
RD6_DRV
RD7_DRV
3P_DRV
3B_DRV
5B_DRV
UBAY_DRV
M1_DRV
M2_DRV
S1_DRV
S2_DRV
BAT_DRV
DCIN_DRV
M_PGS
B_PGS
PWRSHUTDWN#
DGND1 DGND2 DGND3 PGND1 PGND2 AGND
TB62D515FG-GP
3FP_DRV 64
B_DRV 94
VCC3LAN_DRV 91
VCC3WAN_HY_DRV 96
VCC3WLAN_DRV 96
HY_BRIDGE_DRV 96
VCC3P_DRV 34
VCC3B_DRV 37,94
VCC5B_DRV 94
VCC5MUBAY_DRV 59
M1_DRV 73
M2_DRV 73
S1_DRV 59
S2_DRV 59
BAT_DRV 73
DCIN_DRV 72
VINT20
D120 RB521SM-30T2R-GP
C1038 SCD01U25V2KX-3GP
CP28OUT2
C1037 SC1U25V3KX-1-GP
D121 RB521SM-30T2R-GP
59,60 DISCHARGE
C1039 SCD22U50V5KX-3GP
R1529 100KR2J-1-GP
R37 51KR2J-1-GP
VCC3SW
VCC3B
VCC3M
R1524 33KR2J-3-GP
R1526 2KR2J-1-GP
R1525 10KR2J-3-GP
MPWRG_R
R1528 0R2J-2-GP
MPWRG 11,26,32,64
BPWRG 11,26,32,61,62,69
-PWRSHUTDOWN 59,72,74,78
R1530 0R2J-2-GP
R1531 0R2J-2-GP
3M_PWRG 78
5M_PWRG 78
C1040 SC470P50V2KX-3GP
VCC3SW
R1533 33KR2J-3-GP
-PWRSHUTDOWN
R1532 0R2J-2-GP
62 -SHUTDOWN
TH_DET
C1041 SCD1U10V2KX-4GP
RT1 NTC-540-GP
RT2 NTC-540-GP
RT3 NTC-540-GP
RT4 NTC-540-GP
RT5 NTC-540-GP
RT6 NTC-540-GP
RT7 NTC-540-GP
RT8 NTC-540-GP
RT9 NTC-540-GP
RT10 NTC-540-GP
RT11 NTC-540-GP
TH_RT1_7
TH_RT7_2
TH_RT2_8
TH_RT8_3
TH_RT3_9
TH_RT9_4
TH_RT4_10
TH_RT10_5
TH_RT5_11
TH_RT11_6

PTC Placement List

	PTC Position
RT11	VCC3M_DC/DC_High_side_FET (Q88)
RT6	VCC5M_DC/DC_High_side_FET (Q86 or Q87)
RT9	DOCK_PWR20_IN_FET (Q30)
RT3	DCIN_PWR20F_FET (Q51)
RT5	CHARGER_OUT12_FET (Q75)
RT10	M_BAT_PWR_A_FET (Q62)
RT4	S_BAT_PWR_A_FET (Q65)
RT2	VCCCPUCORE_Driver-1 (U47)
RT7	VCCCPUCORE_Driver-2 (U49)
RT1	VCCGFXCORE_Driver (U50)
RT8	CPU_Die (U1)

<Variant Name>

緯創資通 **Wistron Corporation**
21F, 88, Sec.1, Hsin Tai Wu Rd., Hsichih,
Taipei Hsien 221, Taiwan, R.O.C.

Title: Think Engine (2/2)

Size: A3
Document Number: Dasher-2
Rev: -1

Date: Friday, March 09, 2012
Sheet 71 of 101

D56

ESD5Z3.3T1G(OnSemi)	83.ESD5Z.0AF
uClamp3301H(SEMTECH)	83.03301.AAF

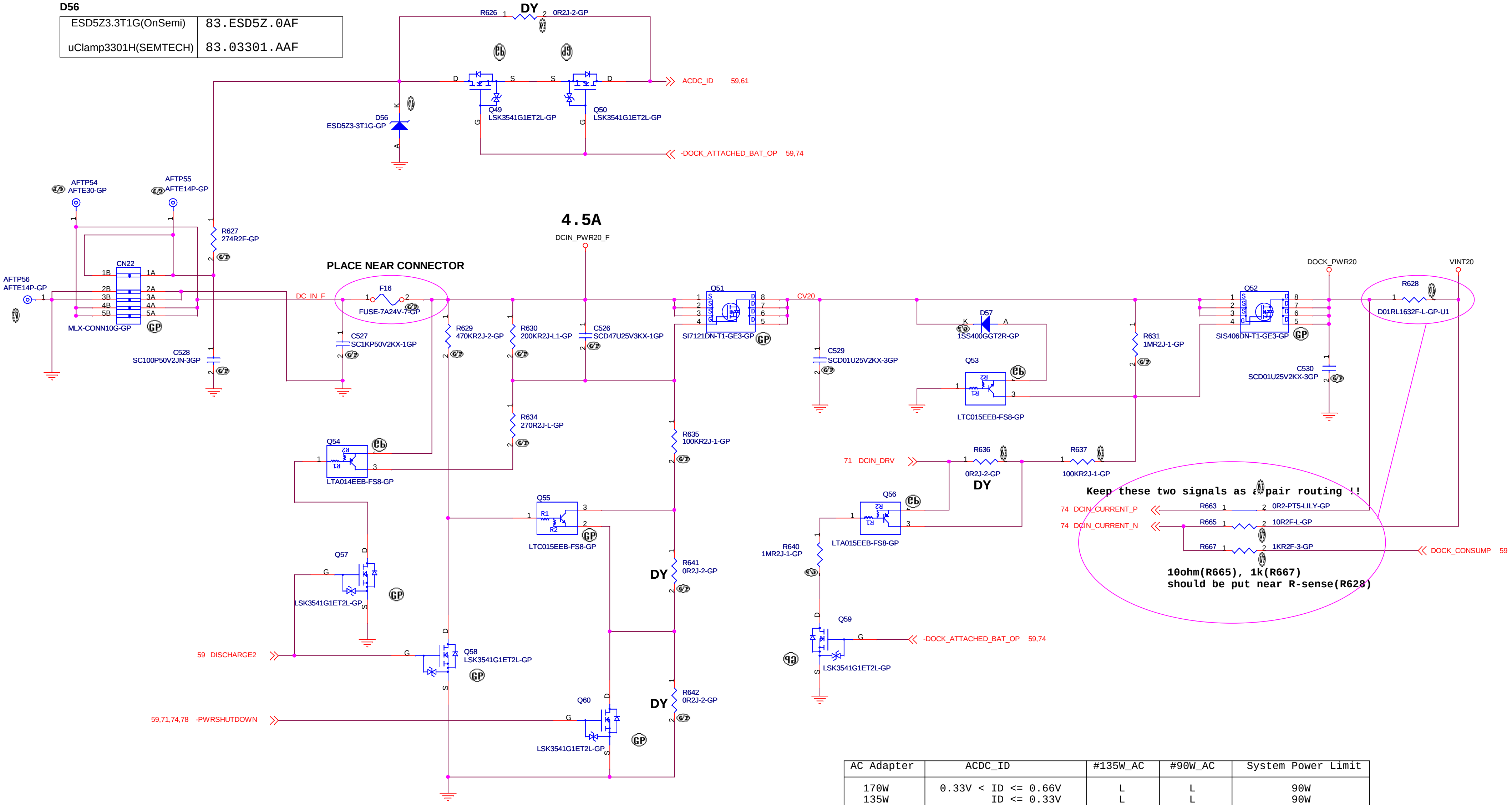

R626
DY
0R2J-2-GP
Q49
LSK3541G1ET2L-GP
Q50
LSK3541G1ET2L-GP
ACDC_ID 59,61
-DOCK_ATTACHED_BAT_OP 59,74
D56
ESD5Z3-3T1G-GP
AFTP54
AFTE30-GP
AFTP55
AFTE14P-GP
AFTP56
AFTE14P-GP
CN22
MLX-CONN10G-GP
R627
274R2F-GP
C528
SC100P50V2JN-3GP
PLACE NEAR CONNECTOR
DC_IN_F
F16
FUSE-7A24V-7-GP
C527
SC1KP50V2KX-1GP
4.5A
DCIN_PWR20_F
R629
470KR2J-2-GP
R630
200KR2J-L1-GP
C526
SCD47U25V3KX-1GP
R634
270R2J-L-GP
Q51
SI7121DN-T1-GE3-GP
CV20
C529
SCD01U25V2KX-3GP
D57
1SS400GGT2R-GP
Q53
LTC015EEB-FS8-GP
R631
1MR2J-1-GP
Q52
SIS406DN-T1-GE3-GP
C530
SCD01U25V2KX-3GP
DOCK_PWR20
VINT20
R628
D01RL1632F-L-GP-U1
Q54
LTA014EEB-FS8-GP
R635
100KR2J-1-GP
71 DCIN_DRV
R636
0R2J-2-GP
DY
R637
100KR2J-1-GP
Q55
LTC015EEB-FS8-GP
Q56
LTA015EEB-FS8-GP
Keep these two signals as a pair routing !!
74 DCIN_CURRENT_P
74 DCIN_CURRENT_N
R663
0R2-PT5-LILY-GP
R665
10R2F-L-GP
R667
1KR2F-3-GP
DOCK_CONSUMP 59
10ohm(R665), 1k(R667)
should be put near R-sense(R628)
Q57
LSK3541G1ET2L-GP
R640
1MR2J-1-GP
R641
0R2J-2-GP
DY
Q59
LSK3541G1ET2L-GP
-DOCK_ATTACHED_BAT_OP 59,74
59 DISCHARGE2
Q58
LSK3541G1ET2L-GP
R642
0R2J-2-GP
DY
Q60
LSK3541G1ET2L-GP
59,71,74,78 -PWRSHUTDOWN

AC Adapter	ACDC_ID	#135W_AC	#90W_AC	System Power Limit
170W	0.33V < ID <= 0.66V	L	L	90W
135W	ID <= 0.33V	L	L	90W
90W	2.64V < ID	H	L	90W
65W	1.32V < ID <= 1.98V	H	H	65W

PEAK SHIFT	YES	NO
R641	NO-ASM	ASM
R629	ASM	NO-ASM
Q58	ASM	NO-ASM
Q55	ASM	NO-ASM

Logic

<Core Design>

緯創資通 **Wistron Corporation**
21F, 88, Sec.1, Hsin Tai Wu Rd., Hsichih,
Taipei Hsien 221, Taiwan, R.O.C.

Title
DC-IN

Size Custom
Document Number **Dasher-2**
Rev -1

Date: Friday, March 09, 2012 Sheet 72 of 101

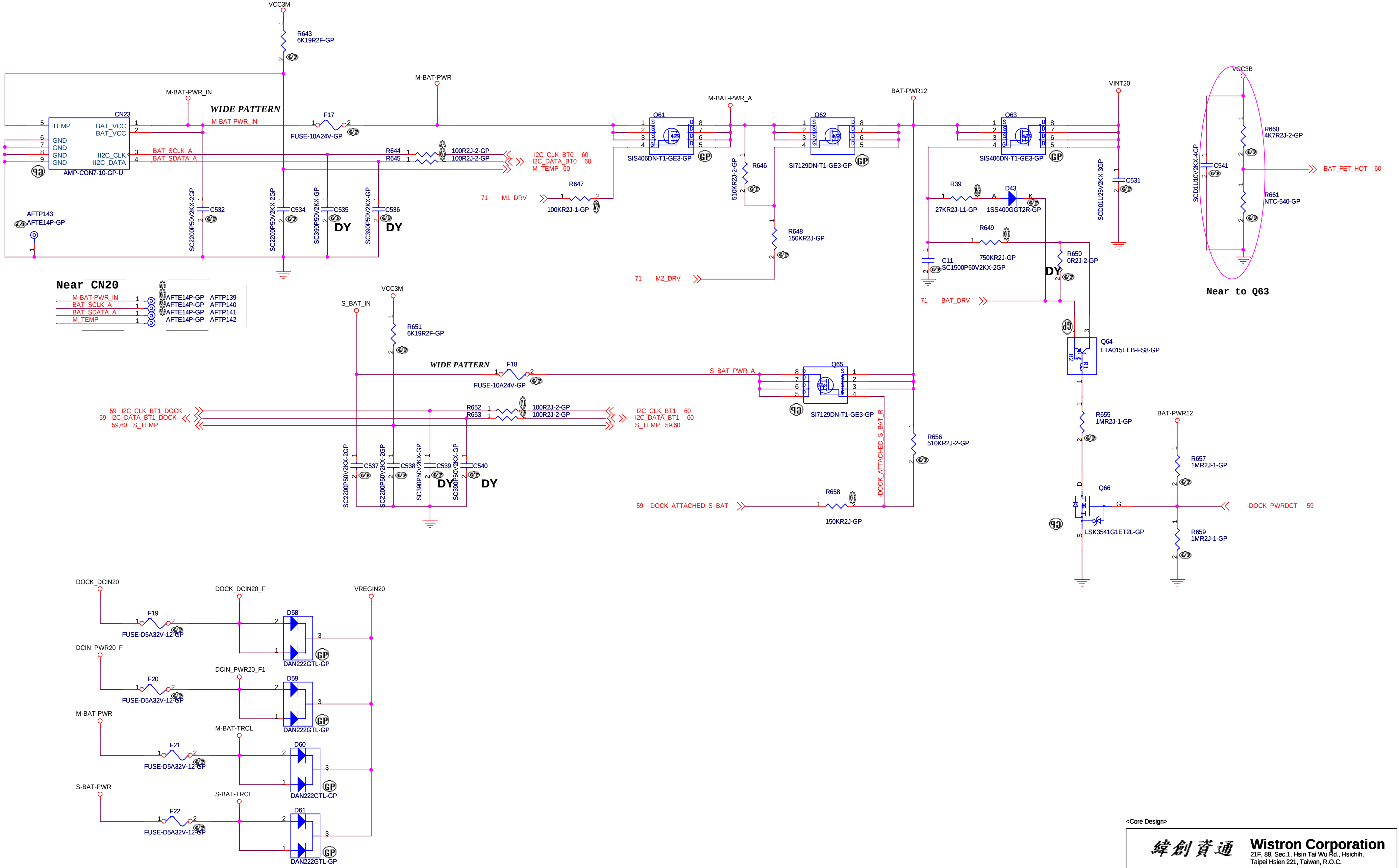
VCC3M
R643
6K19R2F-GP
CN23
TEMP
BAT_VCC
BAT_VCC
GND
GND
GND
GND
II2C_CLK
II2C_DATA
AMP-CON7-10-GP-U
M-BAT-PWR_IN
WIDE PATTERN
F17
FUSE-10A24V-GP
M-BAT-PWR
BAT_SCLK_A
BAT_SDATA_A
R644
R645
100R2J-2-GP
100R2J-2-GP
I2C_CLK_BT0 60
I2C_DATA_BT0 60
M_TEMP 60
71 M1_DRV
R647
100KR2J-1-GP
AFTP143
AFTE14P-GP
SC2200P50V2KX-2GP
C532
C534
SC390P50V2KX-GP
C535
C536
DY
Q61
SIS406DN-T1-GE3-GP
M-BAT-PWR_A
Q62
SI7129DN-T1-GE3-GP
BAT-PWR12
Q63
SIS406DN-T1-GE3-GP
VINT20
VCC3B
R646
510KR2J-2-GP
R648
150KR2J-GP
71 M2_DRV
R39
27KR2J-L1-GP
D43
1SS400GGT2R-GP
R649
750KR2J-GP
C11
SC1500P50V2KX-2GP
R650
0R2J-2-GP
C531
SCD01U25V2KX-3GP
R660
4K7R2J-2-GP
R661
NTC-540-GP
C541
SCD1U10V2KX-4GP
BAT_FET_HOT 60
Near to Q63
71 BAT_DRV
Q64
LTA015EEB-FS8-GP
Near CN20
M-BAT-PWR_IN
BAT_SCLK_A
BAT_SDATA_A
M_TEMP
AFTE14P-GP AFTP139
AFTE14P-GP AFTP140
AFTE14P-GP AFTP141
AFTE14P-GP AFTP142
S_BAT_IN
VCC3M
R651
6K19R2F-GP
WIDE PATTERN
F18
FUSE-10A24V-GP
S_BAT_PWR_A
Q65
SI7129DN-T1-GE3-GP
59 I2C_CLK_BT1_DOCK
59 I2C_DATA_BT1_DOCK
59,60 S_TEMP
R652
R653
100R2J-2-GP
100R2J-2-GP
I2C_CLK_BT1 60
I2C_DATA_BT1 60
S_TEMP 59,60
C537
C538
C539
C540
SC2200P50V2KX-2GP
SC390P50V2KX-GP
-DOCK_ATTACHED_S_BAT_R
R656
510KR2J-2-GP
R658
150KR2J-GP
59 -DOCK_ATTACHED_S_BAT
R655
1MR2J-1-GP
BAT-PWR12
R657
1MR2J-1-GP
Q66
LSK3541G1ET2L-GP
-DOCK_PWRDCT 59
R659
1MR2J-1-GP
DOCK_DCIN20
F19
FUSE-D5A32V-12-GP
DOCK_DCIN20_F
D58
DAN222GTL-GP
VREGIN20
DCIN_PWR20_F
F20
FUSE-D5A32V-12-GP
DCIN_PWR20_F1
D59
DAN222GTL-GP
M-BAT-PWR
F21
FUSE-D5A32V-12-GP
M-BAT-TRCL
D60
DAN222GTL-GP
S-BAT-PWR
F22
FUSE-D5A32V-12-GP
S-BAT-TRCL
D61
DAN222GTL-GP

<Core Design>

緯創資通 **Wistron Corporation**
21F, 88, Sec.1, Hsin Tai Wu Rd., Hsichih,
Taipei Hsien 221, Taiwan, R.O.C.

Title	**BATTERY INPUT**	
Size Custom	Document Number **Dasher-2**	Rev -1
Date: Friday, March 09, 2012	Sheet 73 of 101	

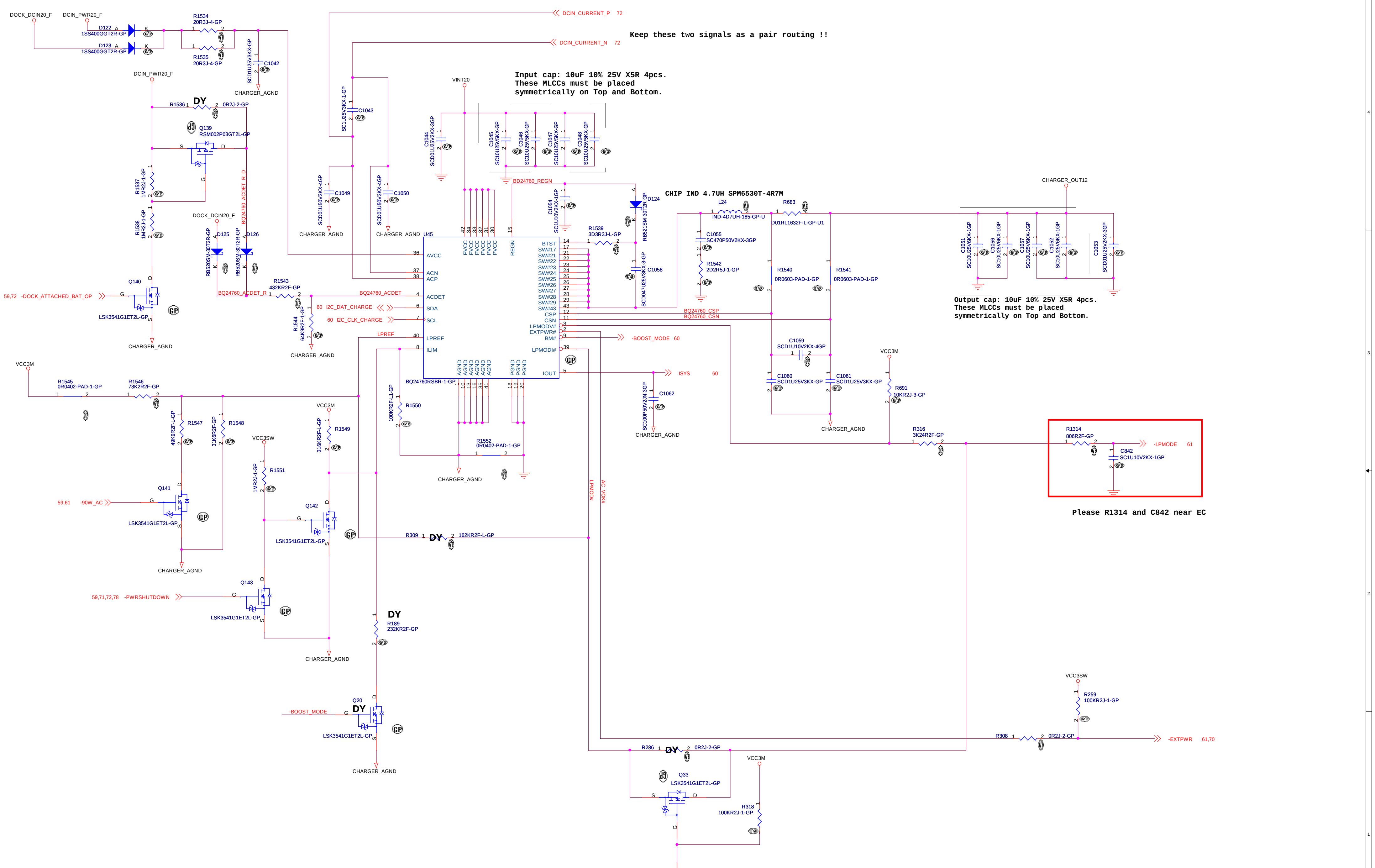
DOCK_DCIN20_F
DCIN_PWR20_F
D122
1SS400GGT2R-GP
D123
1SS400GGT2R-GP
R1534
20R3J-4-GP
R1535
20R3J-4-GP
SCD1U25V3KX-GP
C1042
CHARGER_AGND
DCIN_CURRENT_P 72
DCIN_CURRENT_N 72
Keep these two signals as a pair routing !!
DCIN_PWR20_F
R1536
DY
0R2J-2-GP
Q139
RSM002P03GT2L-GP
R1537
1MR2J-1-GP
R1538
1MR2J-1-GP
BQ24760_ACDET_R_D
DOCK_DCIN20_F
D125
D126
RB520SM-30T2R-GP
BQ24760_ACDET_R
R1543
432KR2F-GP
BQ24760_ACDET
Q140
-DOCK_ATTACHED_BAT_OP 59,72
LSK3541G1ET2L-GP
R1544
64K9R2F-1-GP
60 I2C_DAT_CHARGE
60 I2C_CLK_CHARGE
LPREF
SC1U25V3KX-1-GP
C1043
SCD01U50V3KX-4GP
C1049
SCD01U50V3KX-4GP
C1050
VINT20
C1044
SCD01U25V2KX-3GP
C1045
C1046
C1047
C1048
SC10U25V5KX-GP
Input cap: 10uF 10% 25V X5R 4pcs.
These MLCCs must be placed
symmetrically on Top and Bottom.
BD24760_REGN
C1054
SC1U10V2KX-1GP
D124
RB521SM-30T2R-GP
R1539
3D3R3J-L-GP
C1058
SCD047U25V3KX-3-GP
CHIP IND 4.7UH SPM6530T-4R7M
L24
IND-4D7UH-185-GP-U
R683
D01RL1632F-L-GP-U1
C1055
SC470P50V2KX-3GP
R1542
2D2R5J-1-GP
R1540
0R0603-PAD-1-GP
R1541
0R0603-PAD-1-GP
BQ24760_CSP
BQ24760_CSN
CHARGER_OUT12
C1051
C1056
C1057
C1052
SC10U25V6KX-1GP
C1053
SCD01U25V2KX-3GP
Output cap: 10uF 10% 25V X5R 4pcs.
These MLCCs must be placed
symmetrically on Top and Bottom.
U45
BQ24760RSBR-1-GP
AVCC
ACN
ACP
ACDET
SDA
SCL
LPREF
ILIM
PVCC
REGN
BTST
SW#17
SW#21
SW#22
SW#23
SW#24
SW#25
SW#26
SW#27
SW#28
SW#29
SW#43
CSP
CSN
LPMODV#
EXTPWR#
BM#
LPMODI#
IOUT
AGND
PGND
-BOOST_MODE 60
ISYS 60
C1059
SCD1U10V2KX-4GP
C1060
SCD1U25V3KX-GP
C1061
SCD1U25V3KX-GP
C1062
SC100P50V2JN-3GP
VCC3M
R691
10KR2J-3-GP
R316
3K24R2F-GP
R1314
806R2F-GP
-LPMODE 61
C842
SC1U10V2KX-1GP
Please R1314 and C842 near EC
VCC3M
R1545
0R0402-PAD-1-GP
R1546
73K2R2F-GP
R1547
49K9R2F-L-GP
R1548
31K6R2F-GP
Q141
-90W_AC 59,61
LSK3541G1ET2L-GP
VCC3SW
R1551
1MR2J-1-GP
VCC3M
R1549
316KR2F-L-GP
Q142
LSK3541G1ET2L-GP
R1550
100KR2F-L1-GP
R1552
0R0402-PAD-1-GP
R309
DY
162KR2F-L-GP
LPMODI#
AC_VOK#
Q143
-PWRSHUTDOWN 59,71,72,78
LSK3541G1ET2L-GP
DY
R189
232KR2F-GP
Q20
DY
-BOOST_MODE
LSK3541G1ET2L-GP
VCC3SW
R259
100KR2J-1-GP
R308
0R2J-2-GP
-EXTPWR 61,70
R286
DY
0R2J-2-GP
Q33
LSK3541G1ET2L-GP
VCC3M
R318
100KR2J-1-GP
Q41
LSK3541G1ET2L-GP
60 -LPMODI_ON
R317
1MR2J-1-GP

<Core Design>

緯創資通 **Wistron Corporation**
21F, 88, Sec.1, Hsin Tai Wu Rd., Hsichih,
Taipei Hsien 221, Taiwan, R.O.C.

Title
DC-IN AND CHARGER (BQ24760)

Size A2 | Document Number **Dasher-2** | Rev -1

Date: Friday, March 09, 2012 | Sheet 74 of 101

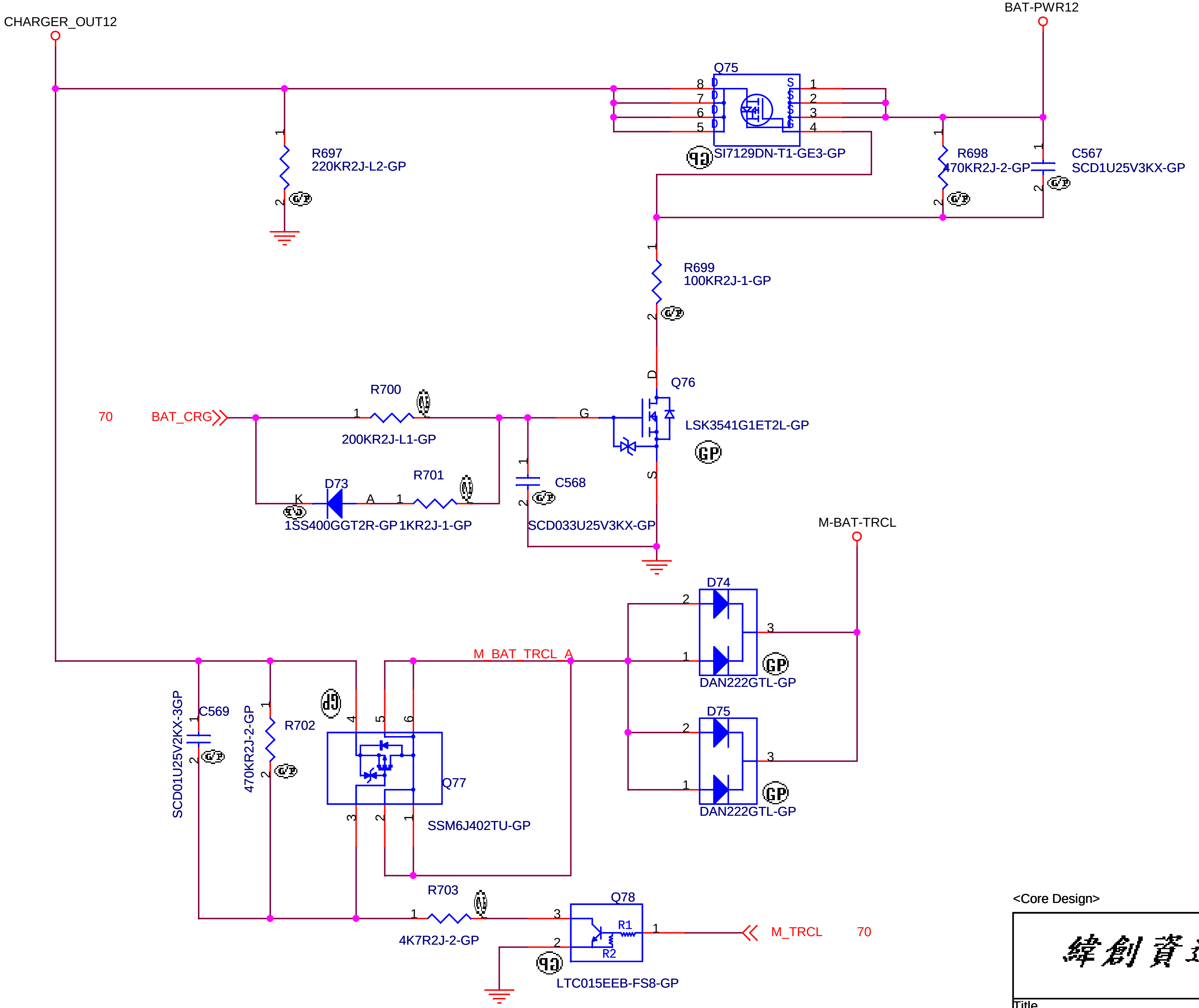
CHARGER_OUT12
BAT-PWR12
Q75
8 D
7 D
6 D
5 D
S 1
S 2
S 3
G 4
SI7129DN-T1-GE3-GP
R697
220KR2J-L2-GP
R698
470KR2J-2-GP
C567
SCD1U25V3KX-GP
R699
100KR2J-1-GP
Q76
D
G
S
LSK3541G1ET2L-GP
70
BAT_CRG
R700
200KR2J-L1-GP
D73
K
A
1SS400GGT2R-GP
R701
1KR2J-1-GP
C568
SCD033U25V3KX-GP
M-BAT-TRCL
D74
DAN222GTL-GP
D75
DAN222GTL-GP
M_BAT_TRCL_A
C569
SCD01U25V2KX-3GP
R702
470KR2J-2-GP
Q77
SSM6J402TU-GP
R703
4K7R2J-2-GP
Q78
R1
R2
LTC015EEB-FS8-GP
M_TRCL
70
GP

<Core Design>

緯創資通 **Wistron Corporation**

21F, 88, Sec.1, Hsin Tai Wu Rd., Hsichih,
Taipei Hsien 221, Taiwan, R.O.C.

Title

CHARGER SELECT

Size	Document Number	Rev
A4	**Dasher-2**	**-1**

Date: Friday, March 09, 2012 Sheet 75 of 101

VOUT = 0.249 (VBAT - 5)

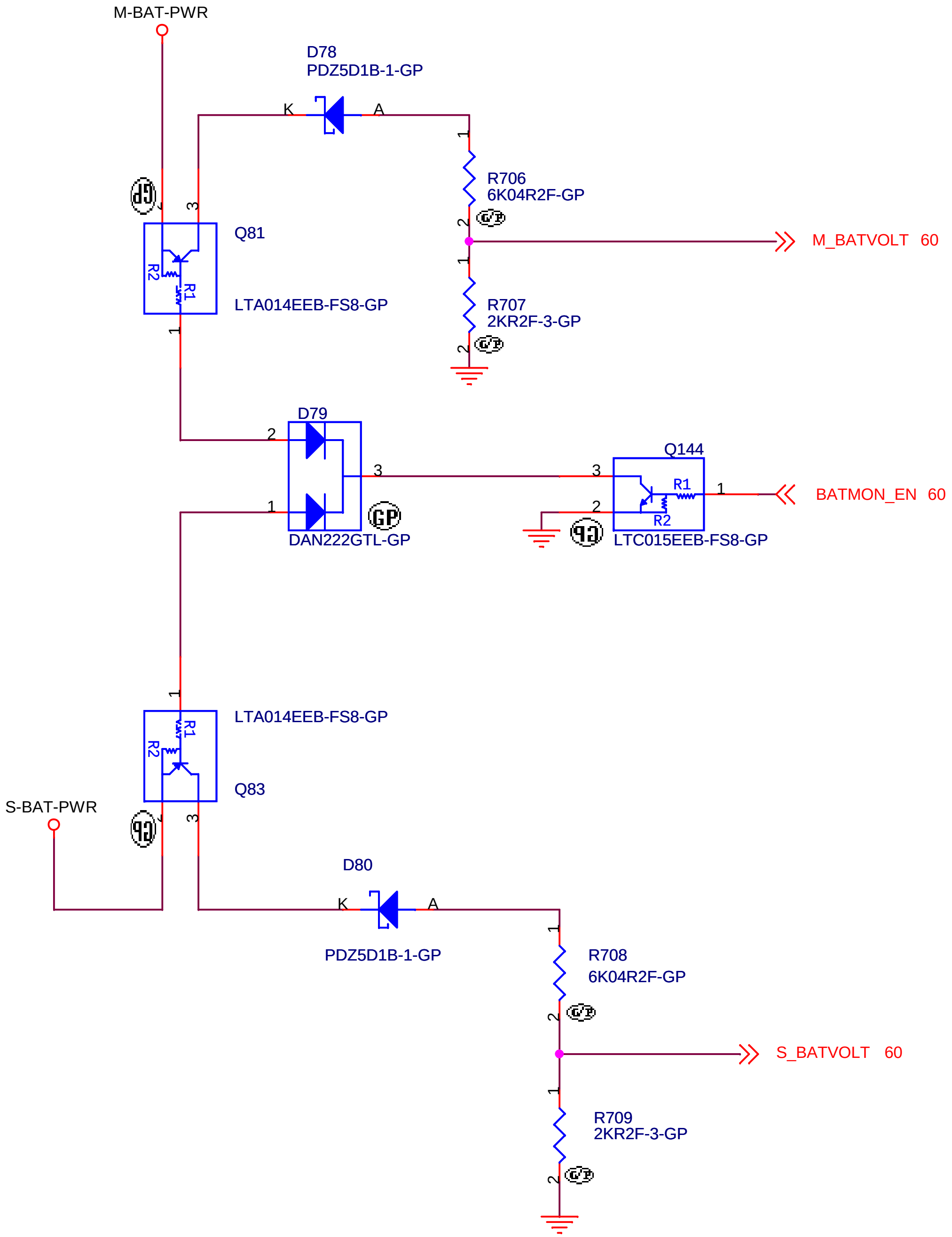
M-BAT-PWR
D78
PDZ5D1B-1-GP
K
A
R706
6K04R2F-GP
Q81
LTA014EEB-FS8-GP
R1
R2
M_BATVOLT 60
R707
2KR2F-3-GP
D79
DAN222GTL-GP
Q144
LTC015EEB-FS8-GP
BATMON_EN 60
LTA014EEB-FS8-GP
Q83
S-BAT-PWR
D80
PDZ5D1B-1-GP
R708
6K04R2F-GP
S_BATVOLT 60
R709
2KR2F-3-GP
GP

<Core Design>

緯創資通 **Wistron Corporation**
21F, 88, Sec.1, Hsin Tai Wu Rd., Hsichih,
Taipei Hsien 221, Taiwan, R.O.C.

Title **BATTERY MONITOR**		
Size A4	Document Number **Dasher-2**	Rev **-1**
Date: Friday, March 09, 2012	Sheet 76 of 101	

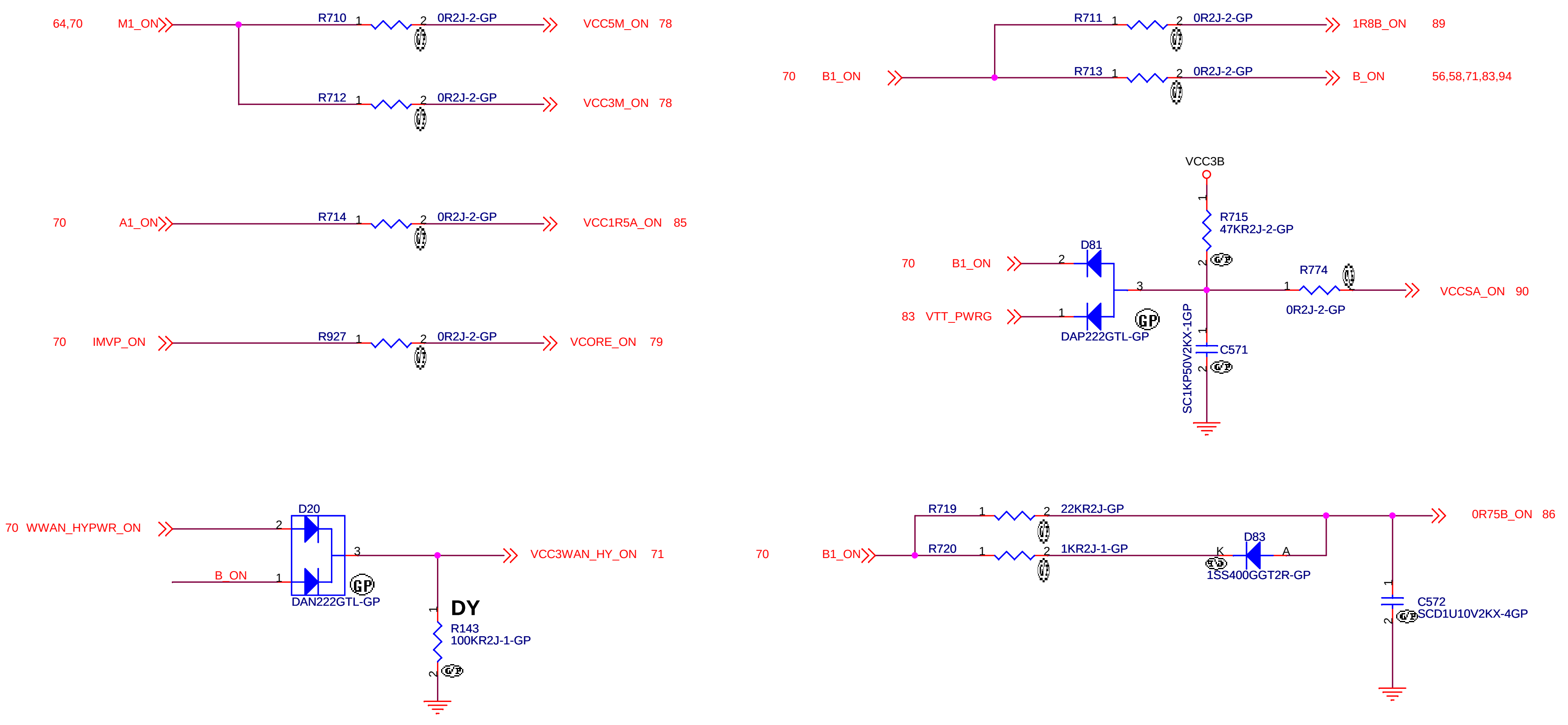
64,70 M1_ON
R710 1 2 0R2J-2-GP
VCC5M_ON 78
R712 1 2 0R2J-2-GP
VCC3M_ON 78
70 A1_ON
R714 1 2 0R2J-2-GP
VCC1R5A_ON 85
70 IMVP_ON
R927 1 2 0R2J-2-GP
VCORE_ON 79
70 B1_ON
R711 1 2 0R2J-2-GP
1R8B_ON 89
R713 1 2 0R2J-2-GP
B_ON 56,58,71,83,94
VCC3B
R715
47KR2J-2-GP
D81
70 B1_ON
83 VTT_PWRG
DAP222GTL-GP
R774
0R2J-2-GP
VCCSA_ON 90
C571
SC1KP50V2KX-1GP
70 WWAN_HYPWR_ON
D20
B_ON
DAN222GTL-GP
VCC3WAN_HY_ON 71
DY
R143
100KR2J-1-GP
70 B1_ON
R719 1 2 22KR2J-GP
R720 1 2 1KR2J-1-GP
D83
K A
1SS400GGT2R-GP
0R75B_ON 86
C572
SCD1U10V2KX-4GP
GP

AOAC **Duplicity**	**YES** **YES**	**YES** **NO**	**NO** **YES**	**NO** **NO**
D20 **R143**	**ASM** **DY**	**ASM** **DY**	**ASM** **DY**	**DY** **ASM**

↑
Logic

<Core Design>

緯創資通 **Wistron Corporation**
21F, 88, Sec.1, Hsin Tai Wu Rd., Hsichih,
Taipei Hsien 221, Taiwan, R.O.C.

Title
POWER SEQUENCE

Size Custom
Document Number **Dasher-2**
Rev **-1**
Date: Friday, March 09, 2012
Sheet 77 of 101

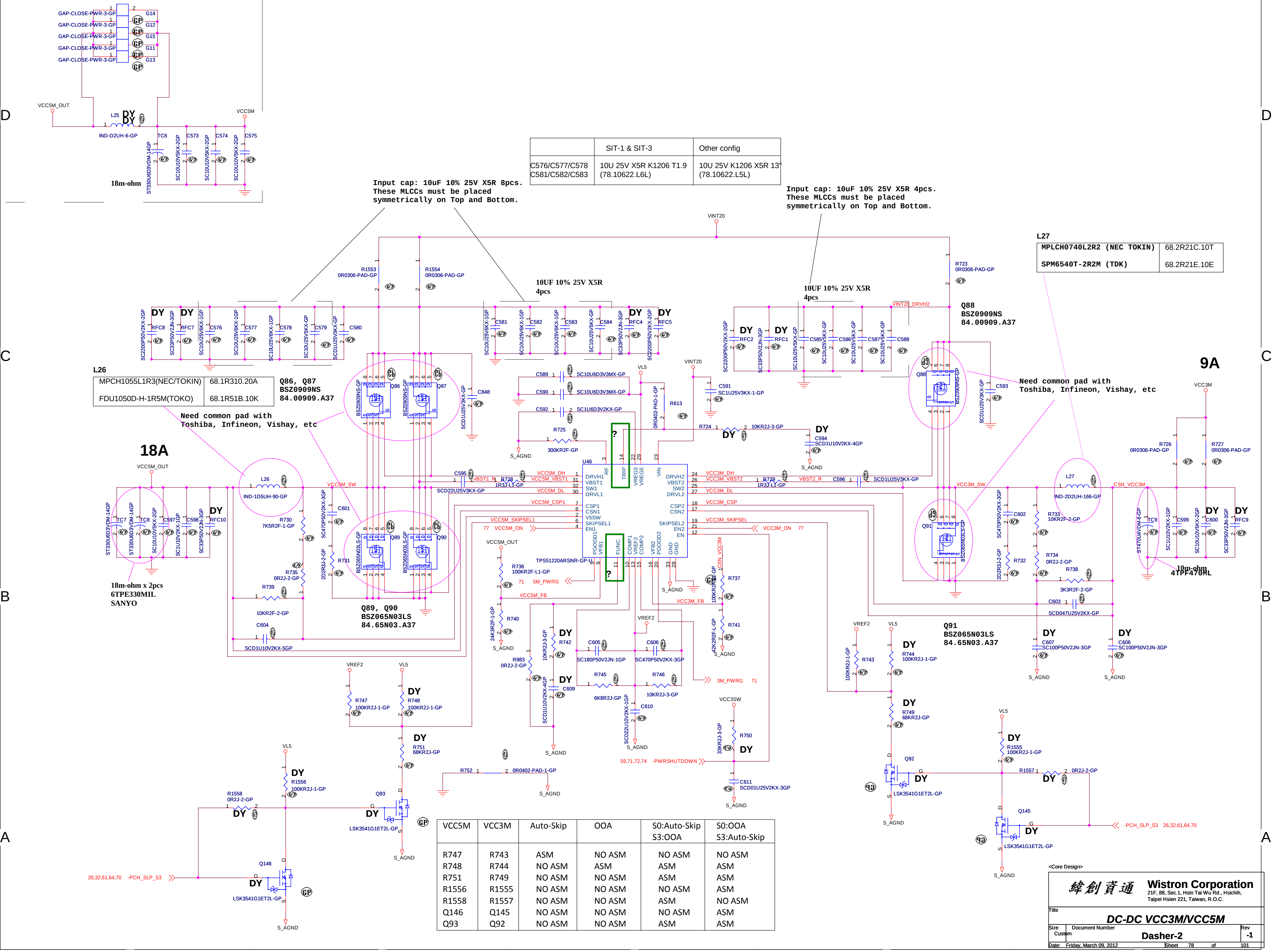
GAP-CLOSE-PWR-3-GP
G14
G12
G15
G11
G13
VCC5M_OUT
L25
IND-D2UH-6-GP
VCC5M
TC6
C573
C574
C575
ST330U6D3VDM-14GP
SC10U10V5KX-2GP
18m-ohm
DY
VINT20
R1553
0R0306-PAD-GP
R1554
0R0306-PAD-GP
R723
0R0306-PAD-GP
RFC8
RFC7
C576
C577
C578
C579
C580
SC2200P50V2KX-2GP
SC33P50V2JN-3GP
SC10U25V6KX-1GP
SC10U25V5KX-2GP
SCD1U25V3KX-GP
C581
C582
C583
C584
RFC4
RFC5
10UF 10% 25V X5R
4pcs
RFC2
RFC1
C585
C586
C587
C588
VINT20_DRVH2
Q88
BSZ0909NS
84.00909.A37
C593
L26
Q86
Q87
BSZ0909NS-GP
C848
C589
SC10U6D3V3MX-GP
C590
C591
SC1U25V3KX-1-GP
C592
SC1U6D3V2KX-GP
VL5
R613
0R0402-PAD-1-GP
R725
300KR2F-GP
S_AGND
R724
10KR2J-3-GP
C594
SCD1U10V2KX-4GP
18A
VCC5M_OUT
L26
IND-1D5UH-90-GP
VCC5M_SW
C595
VBST1_R
R728
1R3J-L1-GP
SCD22U25V3KX-GP
VCC5M_DH
VCC5M_VBST1
VCC5M_DL
VCC5M_CSP1
VCC5M_SKIPSEL1
77 VCC5M_ON
U46
RF
TRIP
VREG3
VREG5
VIN
DRVH1
VBST1
SW1
DRVL1
CSP1
CSN1
V5SW
SKIPSEL1
EN1
PGOOD1
VFB1
FUNC
COMP1
VREF2
COMP2
VFB2
PGOOD2
GND
DRVH2
VBST2
SW2
DRVL2
CSP2
CSN2
SKIPSEL2
EN2
EN
TPS51220ARSNR-GP-U
?
VCC3M_DH
VCC3M_VBST2
VCC3M_DL
VCC3M_CSP
VCC3M_SKIPSEL
VCC3M_ON 77
VBST2_R
R729
1R3J-L1-GP
C596
SCD1U25V3KX-GP
VCC3M_SW
L27
IND-2D2UH-166-GP
CSN_VCC3M
VCC3M
R726
0R0306-PAD-GP
R727
0R0306-PAD-GP
9A
Q91
BSZ065N03LS-GP
C602
R733
10KR2F-2-GP
R734
0R2J-2-GP
R738
3K3R2F-2-GP
C603
SCD047U25V2KX-GP
R732
2D2R3-2-GP
TC9
C599
C600
RFC9
ST470U4VDM-6-GP
10m-ohm
4TPF470ML
TC7
TC8
C597
C598
RFC10
ST330U6D3VDM-14GP
18m-ohm x 2pcs
6TPE330MIL
SANYO
R730
7K5R2F-1-GP
C601
SC470P50V2KX-3GP
Q89
Q90
BSZ065N03LS-GP
R731
2D2R3-2-GP
R735
0R2J-2-GP
R739
10KR2F-2-GP
C604
SCD1U10V2KX-5GP
Q89, Q90
BSZ065N03LS
84.65N03.A37
VCC5M_OUT
R736
100KR2F-L1-GP
71 5M_PWRG
VCC5M_FB
R740
24K3R2F-1-GP
R737
100KR2F-L1-GP
VCC3M_FB
R741
42K2R2F-1-GP
VREF2
C605
SC180P50V2JN-1GP
C606
SC470P50V2KX-3GP
R742
10KR2J-3-GP
R983
0R2J-2-GP
C609
SCD1U10V2KX-4GP
R745
6K8R2J-GP
R746
10KR2J-3-GP
3M_PWRG 71
C610
SCD22U10V2KX-1GP
VCC3SW
R750
33KR2J-3-GP
59,71,72,74 -PWRSHUTDOWN
C611
SCD01U25V2KX-3GP
R752
0R0402-PAD-1-GP
VREF2
VL5
R743
100KR2J-1-GP
R744
100KR2J-1-GP
R749
68KR2J-GP
Q92
LSK3541G1ET2L-GP
Q91
BSZ065N03LS
84.65N03.A37
C607
SC100P50V2JN-3GP
C608
SC100P50V2JN-3GP
VL5
R1555
100KR2J-1-GP
R1557
0R2J-2-GP
Q145
LSK3541G1ET2L-GP
-PCH_SLP_S3 26,32,61,64,70
VREF2
VL5
R747
100KR2J-1-GP
R748
100KR2J-1-GP
R751
68KR2J-GP
Q93
LSK3541G1ET2L-GP
VL5
R1556
100KR2J-1-GP
R1558
0R2J-2-GP
Q146
LSK3541G1ET2L-GP
26,32,61,64,70 -PCH_SLP_S3
S_AGND
D
G
S
GP
5
4
3
2
1
D
C
B
A

	SIT-1 & SIT-3	Other config
C576/C577/C578 C581/C582/C583	10U 25V X5R K1206 T1.9 (78.10622.L6L)	10U 25V K1206 X5R 13" (78.10622.L5L)

Input cap: 10uF 10% 25V X5R 8pcs.
These MLCCs must be placed
symmetrically on Top and Bottom.

Input cap: 10uF 10% 25V X5R 4pcs.
These MLCCs must be placed
symmetrically on Top and Bottom.

L27

MPLCH0740L2R2 (NEC TOKIN)	68.2R21C.10T
SPM6540T-2R2M (TDK)	68.2R21E.10E

L26

MPCH1055L1R3(NEC/TOKIN)	68.1R310.20A
FDU1050D-H-1R5M(TOKO)	68.1R51B.10K

Q86, Q87
BSZ0909NS
84.00909.A37

Need common pad with
Toshiba, Infineon, Vishay, etc

Need common pad with
Toshiba, Infineon, Vishay, etc

VCC5M	VCC3M	Auto-Skip	OOA	S0:Auto-Skip S3:OOA	S0:OOA S3:Auto-Skip
R747	R743	ASM	NO ASM	NO ASM	NO ASM
R748	R744	NO ASM	ASM	ASM	ASM
R751	R749	NO ASM	NO ASM	ASM	ASM
R1555	R1555	NO ASM	NO ASM	NO ASM	ASM
R1558	R1557	NO ASM	NO ASM	ASM	NO ASM
Q146	Q145	NO ASM	NO ASM	NO ASM	ASM
Q93	Q92	NO ASM	NO ASM	ASM	ASM

<Core Design>

緯創資通 **Wistron Corporation**
21F, 88, Sec.1, Hsin Tai Wu Rd., Hsichih,
Taipei Hsien 221, Taiwan, R.O.C.

Title
DC-DC VCC3M/VCC5M

Size	Document Number	Rev
Custom	Dasher-2	-1

Date: Friday, March 09, 2012 Sheet 78 of 101

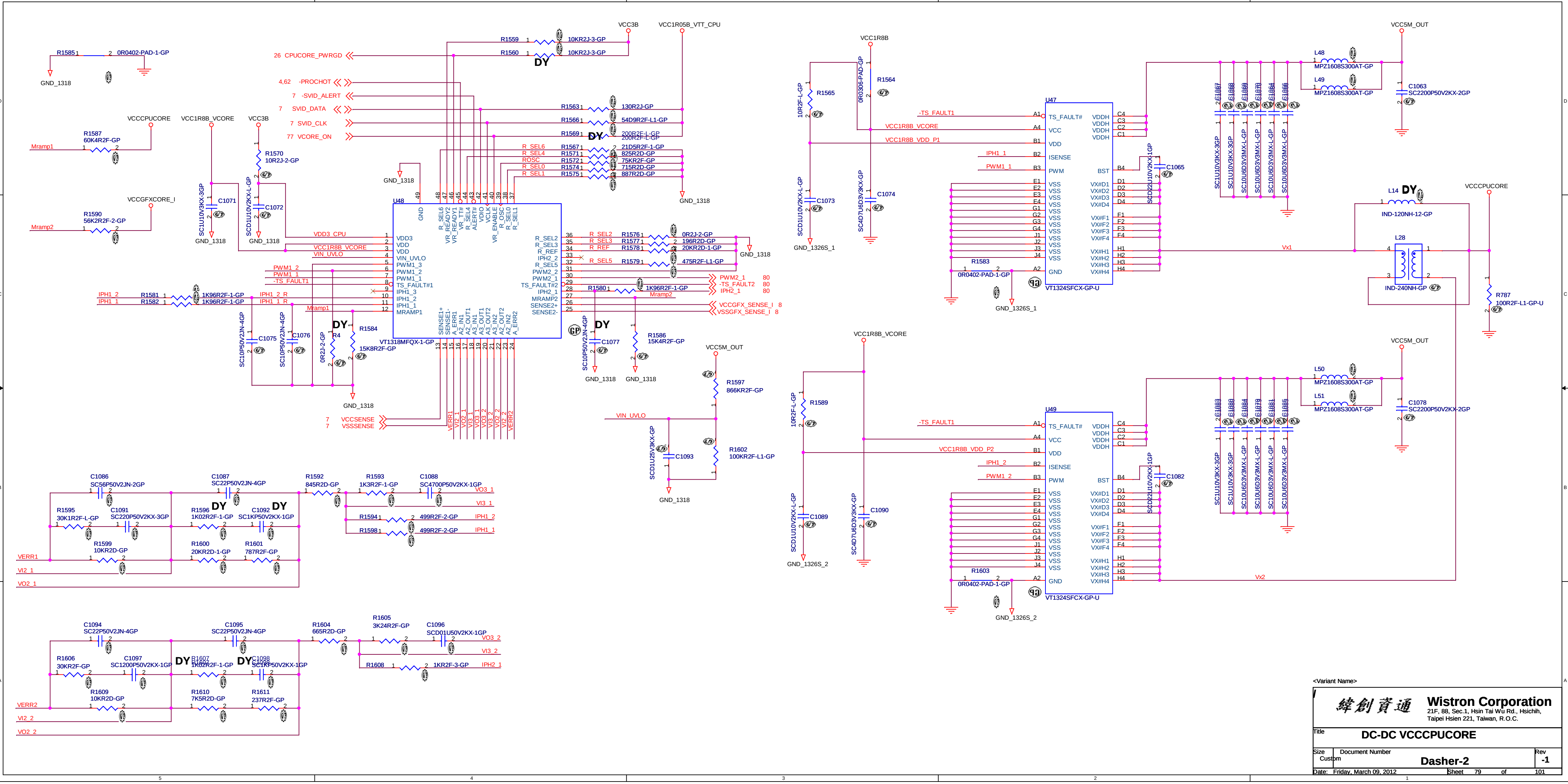
R1585 1 2 0R0402-PAD-1-GP
GND_1318
26 CPUCORE_PWRGD
R1559 1 10KR2J-3-GP
R1560 1 10KR2J-3-GP
VCC3B
VCC1R05B_VTT_CPU
DY
4,62 -PROCHOT
7 -SVID_ALERT
7 SVID_DATA
7 SVID_CLK
77 VCORE_ON
R1563 130R2J-GP
R1566 54D9R2F-L1-GP
R1569 200R2F-L-GP
R_SEL6 R1567 21D5R2F-1-GP
R_SEL4 R1571 825R2D-GP
ROSC R1572 75KR2F-GP
R_SEL0 R1574 715R2D-GP
R_SEL1 R1575 887R2D-GP
GND_1318
VCCCPUCORE
VCC1R8B_VCORE
VCC3B
R1587 60K4R2F-GP
Mramp1
R1570 10R2J-2-GP
SC1U10V3KX-3GP C1071
SCD1U10V2KX-L-GP C1072
VCCGFXCORE_I
R1590 56K2R2F-2-GP
Mramp2
U48
GND
R_SEL6 VR_READY2 VR_READY1 VR_TT# R_SEL4 ALERT# VDIO VCLK VR_ENABLE R_OSC R_SEL0 R_SEL1
VDD3_CPU
VCC1R8B_VCORE
VIN_UVLO
VDD3 VDD VDD VIN_UVLO PWM1_3 PWM1_2 PWM1_1 TS_FAULT#1 IPH1_3 IPH1_2 IPH1_1 MRAMP1
PWM1_2
PWM1_1
-TS_FAULT1
IPH1_2 R1581 1K96R2F-1-GP IPH1_2_R
IPH1_1 R1582 1K96R2F-1-GP IPH1_1_R
Mramp1
R_SEL2 R_SEL3 R_REF IPH2_2 R_SEL5 PWM2_2 PWM2_1 TS_FAULT#2 IPH2_1 MRAMP2 SENSE2+ SENSE2-
R_SEL2 R1576 0R2J-2-GP
R_SEL3 R1577 196R2D-GP
R_REF R1578 20KR2D-1-GP
GND_1318
R_SEL5 R1579 475R2F-L1-GP
PWM2_1 80
-TS_FAULT2 80
IPH2_1 80
R1580 1K96R2F-1-GP
Mramp2
VCCGFX_SENSE_I 8
VSSGFX_SENSE_I 8
SENSE1+ SENSE1- A_ERR1 A2_IN1 A2_OUT1 A3_IN1 A3_OUT1 A2_IN2 A2_OUT2 A3_IN2 A_ERR2
VT1318MFQX-1-GP
SC10P50V2JN-4GP C1075
SC10P50V2JN-4GP C1076
0R2J-2-GP R4
DY
R1584 15K8R2F-GP
GND_1318
7 VCCSENSE
7 VSSSENSE
VERR1 VO2_1 VI2_1 VI3_1 VO3_1 VO3_2 VI3_2 VO2_2 VI2_2 VERR2
SC10P50V2JN-4GP C1077
DY
R1586 15K4R2F-GP
GND_1318 GND_1318
VCC5M_OUT
R1597 866KR2F-GP
VIN_UVLO
SCD1U25V3KX-GP C1093
R1602 100KR2F-L1-GP
GND_1318
C1086 SC56P50V2JN-2GP
C1087 SC22P50V2JN-4GP
R1592 845R2D-GP
R1593 1K3R2F-1-GP
C1088 SC4700P50V2KX-1GP
VO3_1
VI3_1
R1594 499R2F-2-GP IPH1_2
R1598 499R2F-2-GP IPH1_1
R1595 30K1R2F-L-GP
C1091 SC220P50V2KX-3GP
R1596 1K02R2F-1-GP
DY
C1092 SC1KP50V2KX-1GP
DY
R1599 10KR2D-GP
R1600 20KR2D-1-GP
R1601 787R2F-GP
VERR1
VI2_1
VO2_1
C1094 SC22P50V2JN-4GP
C1095 SC22P50V2JN-4GP
R1604 665R2D-GP
R1605 3K24R2F-GP
C1096 SCD01U50V2KX-1GP
VO3_2
VI3_2
R1608 1KR2F-3-GP IPH2_1
R1606 30KR2F-GP
C1097 SC1200P50V2KX-1GP
DY R1607 1K02R2F-1-GP
DY C1098 SC1KP50V2KX-1GP
R1609 10KR2D-GP
R1610 7K5R2D-GP
R1611 237R2F-GP
VERR2
VI2_2
VO2_2
VCC1R8B
10R2F-L-GP R1565
0R0306-PAD-GP R1564
-TS_FAULT1
VCC1R8B_VCORE
VCC1R8B_VDD_P1
IPH1_1
PWM1_1
U47
TS_FAULT# VCC VDD ISENSE PWM VSS GND
VDDH VDDH VDDH VDDH BST VX#D1 VX#D2 VX#D3 VX#D4 VX#F1 VX#F2 VX#F3 VX#F4 VX#H1 VX#H2 VX#H3 VX#H4
SCD22U10V2KX-1GP C1065
SCD1U10V2KX-L-GP C1073
SC4D7U6D3V3KX-GP C1074
GND_1326S_1
R1583 0R0402-PAD-1-GP
GND_1326S_1
VT1324SFCX-GP-U
C1067 C1068 C1069 C1070 C1064 C1066
SC1U10V3KX-3GP SC1U10V3KX-3GP SC10U6D3V3MX-L-GP SC10U6D3V3MX-L-GP SC10U6D3V3MX-L-GP SC10U6D3V3MX-L-GP
L48 MPZ1608S300AT-GP
L49 MPZ1608S300AT-GP
VCC5M_OUT
C1063 SC2200P50V2KX-2GP
L14 DY IND-120NH-12-GP
VCCCPUCORE
L28 IND-240NH-GP
Vx1
R787 100R2F-L1-GP-U
VCC1R8B_VCORE
10R2F-L-GP R1589
-TS_FAULT1
VCC1R8B_VDD_P2
IPH1_2
PWM1_2
U49
SCD22U10V2KX-1GP C1082
SCD1U10V2KX-L-GP C1089
SC4D7U6D3V3KX-GP C1090
GND_1326S_2
R1603 0R0402-PAD-1-GP
GND_1326S_2
VT1324SFCX-GP-U
C1083 C1080 C1084 C1079 C1081 C1085
SC1U10V3KX-3GP SC1U10V3KX-3GP SC10U6D3V3MX-L-GP SC10U6D3V3MX-L-GP SC10U6D3V3MX-L-GP SC10U6D3V3MX-L-GP
L50 MPZ1608S300AT-GP
L51 MPZ1608S300AT-GP
VCC5M_OUT
C1078 SC2200P50V2KX-2GP
Vx2
5 4 3 2 1
D C B A

<Variant Name>

緯創資通 **Wistron Corporation**
21F, 88, Sec.1, Hsin Tai Wu Rd., Hsichih,
Taipei Hsien 221, Taiwan, R.O.C.

Title **DC-DC VCCCPUCORE**

Size Custom Document Number **Dasher-2** Rev -1

Date: Friday, March 09, 2012 Sheet 79 of 101

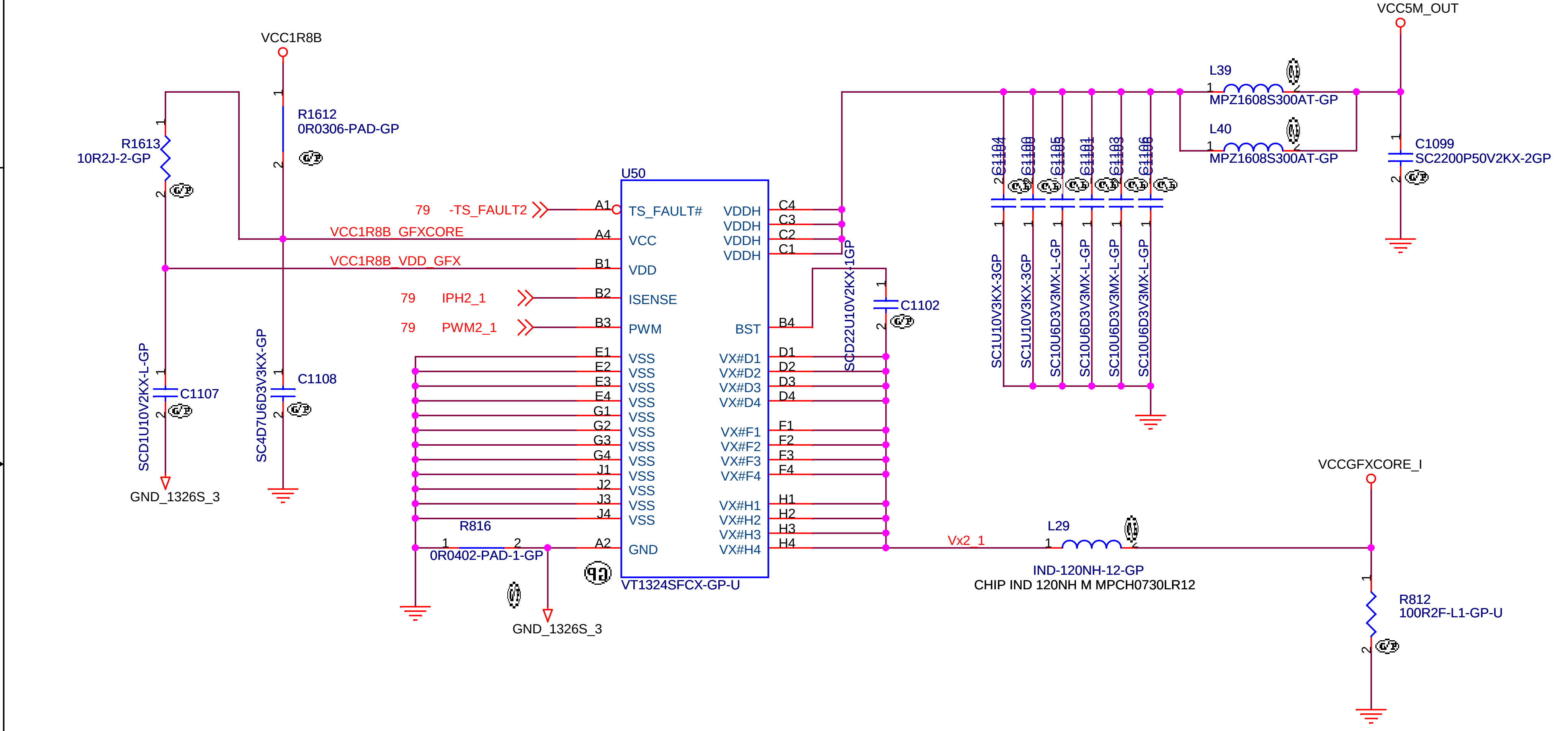
VCC1R8B
R1612
0R0306-PAD-GP
R1613
10R2J-2-GP
U50
79 -TS_FAULT2
VCC1R8B_GFXCORE
VCC1R8B_VDD_GFX
79 IPH2_1
79 PWM2_1
A1 TS_FAULT#
A4 VCC
B1 VDD
B2 ISENSE
B3 PWM
E1 VSS
E2 VSS
E3 VSS
E4 VSS
G1 VSS
G2 VSS
G3 VSS
G4 VSS
J1 VSS
J2 VSS
J3 VSS
J4 VSS
A2 GND
VDDH C4
VDDH C3
VDDH C2
VDDH C1
BST B4
VX#D1 D1
VX#D2 D2
VX#D3 D3
VX#D4 D4
VX#F1 F1
VX#F2 F2
VX#F3 F3
VX#F4 F4
VX#H1 H1
VX#H2 H2
VX#H3 H3
VX#H4 H4
VT1324SFCX-GP-U
R816
0R0402-PAD-1-GP
GND_1326S_3
C1107
SCD1U10V2KX-L-GP
GND_1326S_3
C1108
SC4D7U6D3V3KX-GP
C1102
SCD22U10V2KX-1GP
C1104
C1100
C1105
C1101
C1103
C1106
SC1U10V3KX-3GP
SC1U10V3KX-3GP
SC10U6D3V3MX-L-GP
SC10U6D3V3MX-L-GP
SC10U6D3V3MX-L-GP
SC10U6D3V3MX-L-GP
L39
MPZ1608S300AT-GP
L40
MPZ1608S300AT-GP
VCC5M_OUT
C1099
SC2200P50V2KX-2GP
Vx2_1
L29
IND-120NH-12-GP
CHIP IND 120NH M MPCH0730LR12
VCCGFXCORE_I
R812
100R2F-L1-GP-U

<Variant Name>

緯創資通 **Wistron Corporation**
21F, 88, Sec.1, Hsin Tai Wu Rd., Hsichih,
Taipei Hsien 221, Taiwan, R.O.C.

Title
VCCGFXCORE

Size A4
Document Number **Dasher-2**
Rev **-1**

Date: Friday, March 09, 2012
Sheet 80 of 101

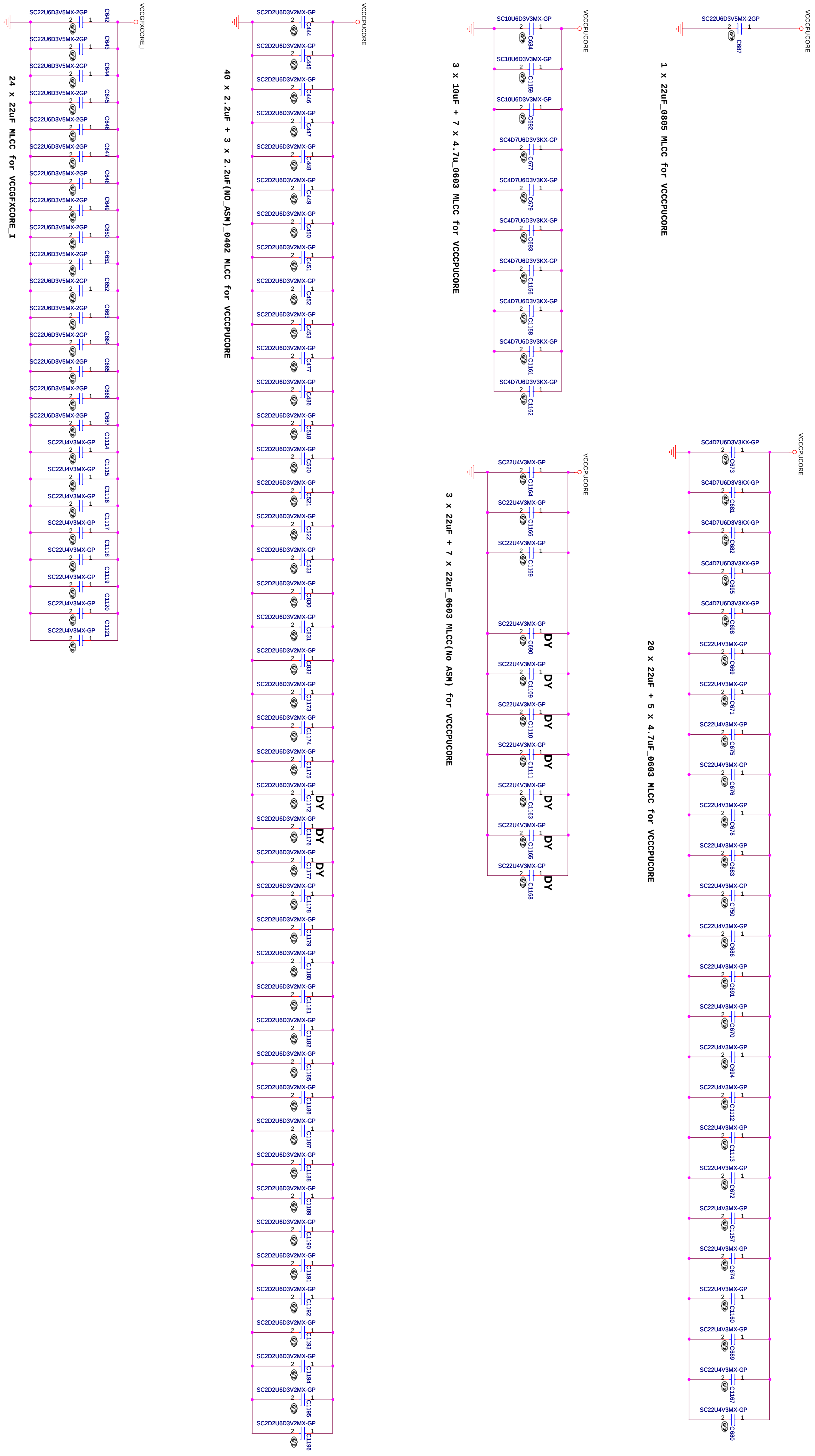
VCCGFXCORE_I
SC22U6D3V5MX-2GP C642
SC22U6D3V5MX-2GP C643
SC22U6D3V5MX-2GP C644
SC22U6D3V5MX-2GP C645
SC22U6D3V5MX-2GP C646
SC22U6D3V5MX-2GP C647
SC22U6D3V5MX-2GP C648
SC22U6D3V5MX-2GP C649
SC22U6D3V5MX-2GP C650
SC22U6D3V5MX-2GP C651
SC22U6D3V5MX-2GP C652
SC22U6D3V5MX-2GP C663
SC22U6D3V5MX-2GP C664
SC22U6D3V5MX-2GP C665
SC22U6D3V5MX-2GP C666
SC22U6D3V5MX-2GP C667
SC22U4V3MX-GP C1114
SC22U4V3MX-GP C1115
SC22U4V3MX-GP C1116
SC22U4V3MX-GP C1117
SC22U4V3MX-GP C1118
SC22U4V3MX-GP C1119
SC22U4V3MX-GP C1120
SC22U4V3MX-GP C1121
VCCCPUCORE
SC2D2U6D3V2MX-GP C444
SC2D2U6D3V2MX-GP C445
SC2D2U6D3V2MX-GP C446
SC2D2U6D3V2MX-GP C447
SC2D2U6D3V2MX-GP C448
SC2D2U6D3V2MX-GP C449
SC2D2U6D3V2MX-GP C450
SC2D2U6D3V2MX-GP C451
SC2D2U6D3V2MX-GP C452
SC2D2U6D3V2MX-GP C453
SC2D2U6D3V2MX-GP C477
SC2D2U6D3V2MX-GP C486
SC2D2U6D3V2MX-GP C518
SC2D2U6D3V2MX-GP C520
SC2D2U6D3V2MX-GP C521
SC2D2U6D3V2MX-GP C522
SC2D2U6D3V2MX-GP C533
SC2D2U6D3V2MX-GP C830
SC2D2U6D3V2MX-GP C831
SC2D2U6D3V2MX-GP C832
SC2D2U6D3V2MX-GP C1173
SC2D2U6D3V2MX-GP C1174
SC2D2U6D3V2MX-GP C1175
SC2D2U6D3V2MX-GP C1172 DY
SC2D2U6D3V2MX-GP C1176 DY
SC2D2U6D3V2MX-GP C1177 DY
SC2D2U6D3V2MX-GP C1178
SC2D2U6D3V2MX-GP C1179
SC2D2U6D3V2MX-GP C1180
SC2D2U6D3V2MX-GP C1181
SC2D2U6D3V2MX-GP C1182
SC2D2U6D3V2MX-GP C1185
SC2D2U6D3V2MX-GP C1186
SC2D2U6D3V2MX-GP C1187
SC2D2U6D3V2MX-GP C1188
SC2D2U6D3V2MX-GP C1189
SC2D2U6D3V2MX-GP C1190
SC2D2U6D3V2MX-GP C1191
SC2D2U6D3V2MX-GP C1192
SC2D2U6D3V2MX-GP C1193
SC2D2U6D3V2MX-GP C1194
SC2D2U6D3V2MX-GP C1195
SC2D2U6D3V2MX-GP C1196
VCCCPUCORE
SC10U6D3V3MX-GP C684
SC10U6D3V3MX-GP C1159
SC10U6D3V3MX-GP C692
SC4D7U6D3V3KX-GP C677
SC4D7U6D3V3KX-GP C679
SC4D7U6D3V3KX-GP C693
SC4D7U6D3V3KX-GP C1156
SC4D7U6D3V3KX-GP C1158
SC4D7U6D3V3KX-GP C1161
SC4D7U6D3V3KX-GP C1162
VCCCPUCORE
SC22U4V3MX-GP C1164
SC22U4V3MX-GP C1166
SC22U4V3MX-GP C1169
SC22U4V3MX-GP C690 DY
SC22U4V3MX-GP C1109 DY
SC22U4V3MX-GP C1110 DY
SC22U4V3MX-GP C1111 DY
SC22U4V3MX-GP C1163 DY
SC22U4V3MX-GP C1165 DY
SC22U4V3MX-GP C1168 DY
VCCCPUCORE
SC22U6D3V5MX-2GP C687
VCCCPUCORE
SC4D7U6D3V3KX-GP C673
SC4D7U6D3V3KX-GP C681
SC4D7U6D3V3KX-GP C682
SC4D7U6D3V3KX-GP C695
SC4D7U6D3V3KX-GP C698
SC22U4V3MX-GP C669
SC22U4V3MX-GP C671
SC22U4V3MX-GP C675
SC22U4V3MX-GP C676
SC22U4V3MX-GP C678
SC22U4V3MX-GP C683
SC22U4V3MX-GP C750
SC22U4V3MX-GP C686
SC22U4V3MX-GP C691
SC22U4V3MX-GP C670
SC22U4V3MX-GP C694
SC22U4V3MX-GP C1112
SC22U4V3MX-GP C1113
SC22U4V3MX-GP C672
SC22U4V3MX-GP C1157
SC22U4V3MX-GP C674
SC22U4V3MX-GP C1160
SC22U4V3MX-GP C689
SC22U4V3MX-GP C1167
SC22U4V3MX-GP C680
2
1

24 x 22uF MLCC for VCCGFXCORE_I

40 x 2.2uF + 3 x 2.2uF(NO_ASM)_0402 MLCC for VCCCPUCORE

3 x 10uF + 7 x 4.7u_0603 MLCC for VCCCPUCORE

1 x 22uF_0805 MLCC for VCCCPUCORE

3 x 22uF + 7 x 22uF_0603 MLCC(No ASM) for VCCCPUCORE

20 x 22uF + 5 x 4.7uF_0603 MLCC for VCCCPUCORE

<Core Design>

緯創資通

Wistron Corporation
21F, 88, Sec.1, Hsin Tai Wu Rd., Hsichih,
Taipei Hsien 221, Taiwan, R.O.C.

Title
DC-DC VCCCPUCORE

Size A2
Document Number
Dasher-2
Rev **-1**

Date: Thursday, March 01, 2012 Sheet 81 of 101

BLANK

<Core Design>

緯創資通 **Wistron Corporation**
21F, 88, Sec.1, Hsin Tai Wu Rd., Hsichih,
Taipei Hsien 221, Taiwan, R.O.C.

Title	***BLANK***	
Size A3	Document Number **Dasher-2**	Rev **-1**
Date: Tuesday, February 21, 2012	Sheet 82 of 101	

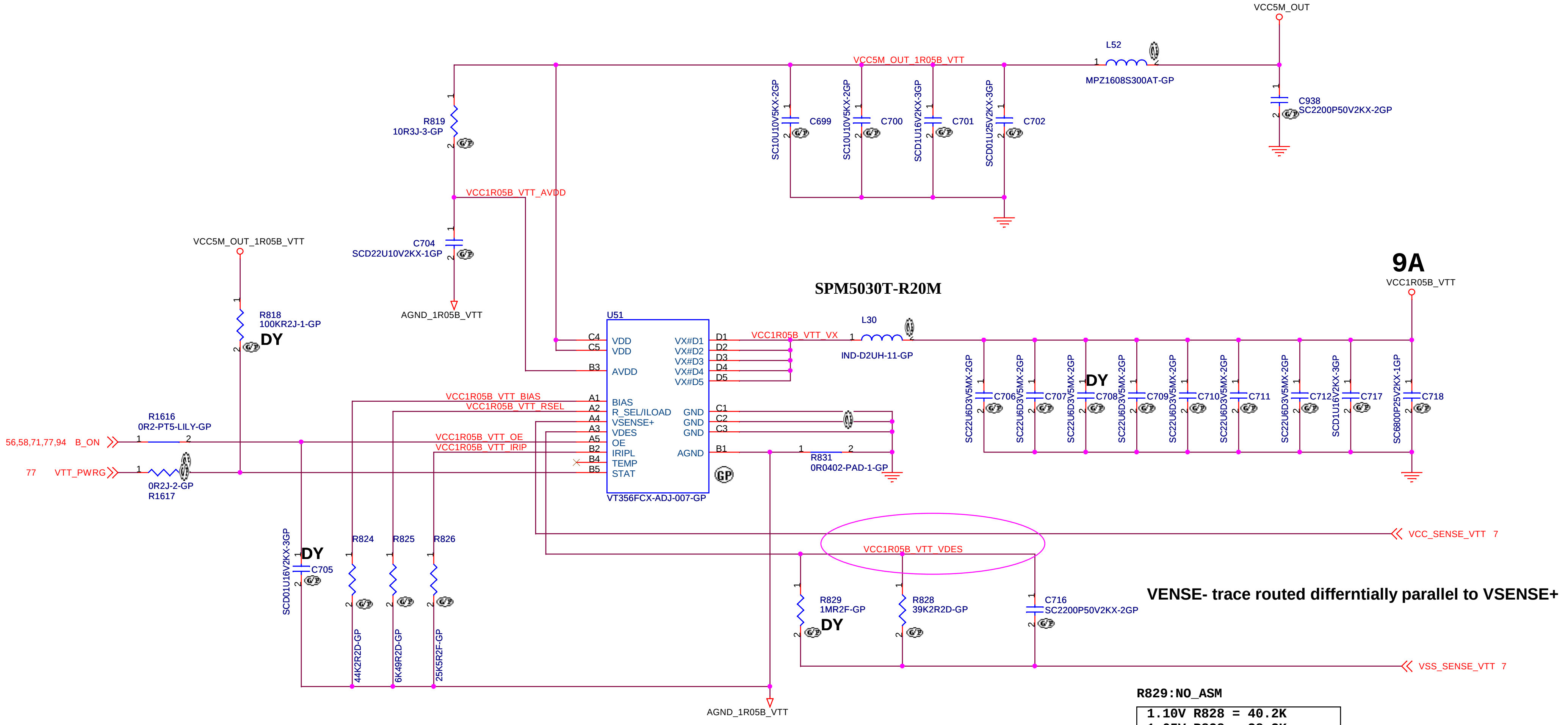
VCC5M_OUT
L52
MPZ1608S300AT-GP
C938
SC2200P50V2KX-2GP
VCC5M_OUT_1R05B_VTT
C699
SC10U10V5KX-2GP
C700
SC10U10V5KX-2GP
C701
SCD1U16V2KX-3GP
C702
SCD01U25V2KX-3GP
R819
10R3J-3-GP
VCC1R05B_VTT_AVDD
C704
SCD22U10V2KX-1GP
AGND_1R05B_VTT
VCC5M_OUT_1R05B_VTT
R818
100KR2J-1-GP
DY
SPM5030T-R20M
9A
VCC1R05B_VTT
U51
VDD
VDD
AVDD
BIAS
R_SEL/ILOAD
VSENSE+
VDES
OE
IRIPL
TEMP
STAT
VX#D1
VX#D2
VX#D3
VX#D4
VX#D5
GND
GND
GND
AGND
VT356FCX-ADJ-007-GP
VCC1R05B_VTT_VX
L30
IND-D2UH-11-GP
C706
SC22U6D3V5MX-2GP
C707
SC22U6D3V5MX-2GP
C708
SC22U6D3V5MX-2GP
DY
C709
SC22U6D3V5MX-2GP
C710
SC22U6D3V5MX-2GP
C711
SC22U6D3V5MX-2GP
C712
SC22U6D3V5MX-2GP
C717
SCD1U16V2KX-3GP
C718
SC6800P25V2KX-1GP
VCC1R05B_VTT_BIAS
VCC1R05B_VTT_RSEL
VCC1R05B_VTT_OE
VCC1R05B_VTT_IRIP
R1616
0R2-PT5-LILY-GP
56,58,71,77,94 B_ON
77 VTT_PWRG
0R2J-2-GP
R1617
R831
0R0402-PAD-1-GP
VCC_SENSE_VTT 7
VCC1R05B_VTT_VDES
C705
SCD01U16V2KX-3GP
DY
R824
44K2R2D-GP
R825
6K49R2D-GP
R826
25K5R2F-GP
R829
1MR2F-GP
DY
R828
39K2R2D-GP
C716
SC2200P50V2KX-2GP
VSS_SENSE_VTT 7
AGND_1R05B_VTT

VENSE- trace routed differntially parallel to VSENSE+

R829:NO_ASM

```
1.10V R828 = 40.2K
1.05V R828 = 38.3K
1.00V R828 = 36.5K
VOUT = 1.212*R828/44.2K
```

<Core Design>

緯創資通 **Wistron Corporation**
21F, 88, Sec.1, Hsin Tai Wu Rd., Hsichih,
Taipei Hsien 221, Taiwan, R.O.C.

Title	*DC-DC VCC1R05B_VTT*	
Size A3	Document Number **Dasher-2**	Rev -1
Date: Friday, March 09, 2012	Sheet 83 of 101	

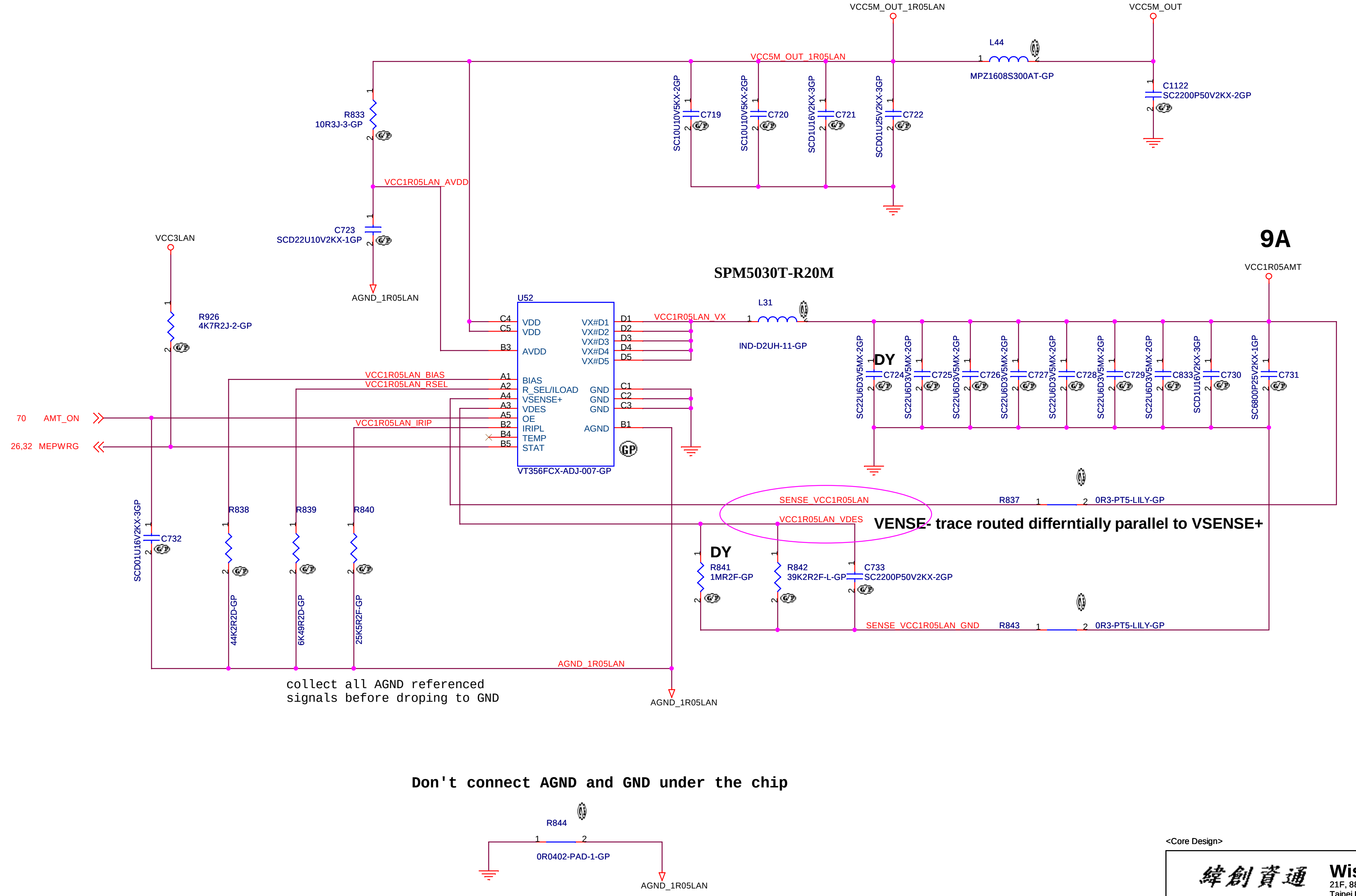
SPM5030T-R20M
9A
VCC5M_OUT_1R05LAN
VCC5M_OUT
L44
MPZ1608S300AT-GP
C1122
SC2200P50V2KX-2GP
R833
10R3J-3-GP
VCC1R05LAN_AVDD
C723
SCD22U10V2KX-1GP
AGND_1R05LAN
C719
SC10U10V5KX-2GP
C720
SC10U10V5KX-2GP
C721
SCD1U16V2KX-3GP
C722
SCD01U25V2KX-3GP
VCC3LAN
R926
4K7R2J-2-GP
U52
VDD
VDD
AVDD
BIAS
R_SEL/ILOAD
VSENSE+
VDES
OE
IRIPL
TEMP
STAT
VX#D1
VX#D2
VX#D3
VX#D4
VX#D5
GND
GND
GND
AGND
VT356FCX-ADJ-007-GP
VCC1R05LAN_VX
L31
IND-D2UH-11-GP
VCC1R05AMT
DY
C724
SC22U6D3V5MX-2GP
C725
SC22U6D3V5MX-2GP
C726
SC22U6D3V5MX-2GP
C727
SC22U6D3V5MX-2GP
C728
SC22U6D3V5MX-2GP
C729
SC22U6D3V5MX-2GP
C833
SC22U6D3V5MX-2GP
C730
SCD1U16V2KX-3GP
C731
SC6800P25V2KX-1GP
VCC1R05LAN_BIAS
VCC1R05LAN_RSEL
VCC1R05LAN_IRIP
70 AMT_ON
26,32 MEPWRG
C732
SCD01U16V2KX-3GP
R838
44K2R2D-GP
R839
6K49R2D-GP
R840
25K5R2F-GP
SENSE_VCC1R05LAN
R837
0R3-PT5-LILY-GP
VCC1R05LAN_VDES
VENSE- trace routed differntially parallel to VSENSE+
DY
R841
1MR2F-GP
R842
39K2R2F-L-GP
C733
SC2200P50V2KX-2GP
SENSE_VCC1R05LAN_GND
R843
0R3-PT5-LILY-GP
AGND_1R05LAN
collect all AGND referenced signals before droping to GND
Don't connect AGND and GND under the chip
R844
0R0402-PAD-1-GP
AGND_1R05LAN

<Core Design>

緯創資通 **Wistron Corporation**
21F, 88, Sec.1, Hsin Tai Wu Rd., Hsichih,
Taipei Hsien 221, Taiwan, R.O.C.

Title	DC-DC VCC1R05AMT	
Size A3	Document Number Dasher-2	Rev -1
Date: Friday, March 09, 2012	Sheet 84 of 101	

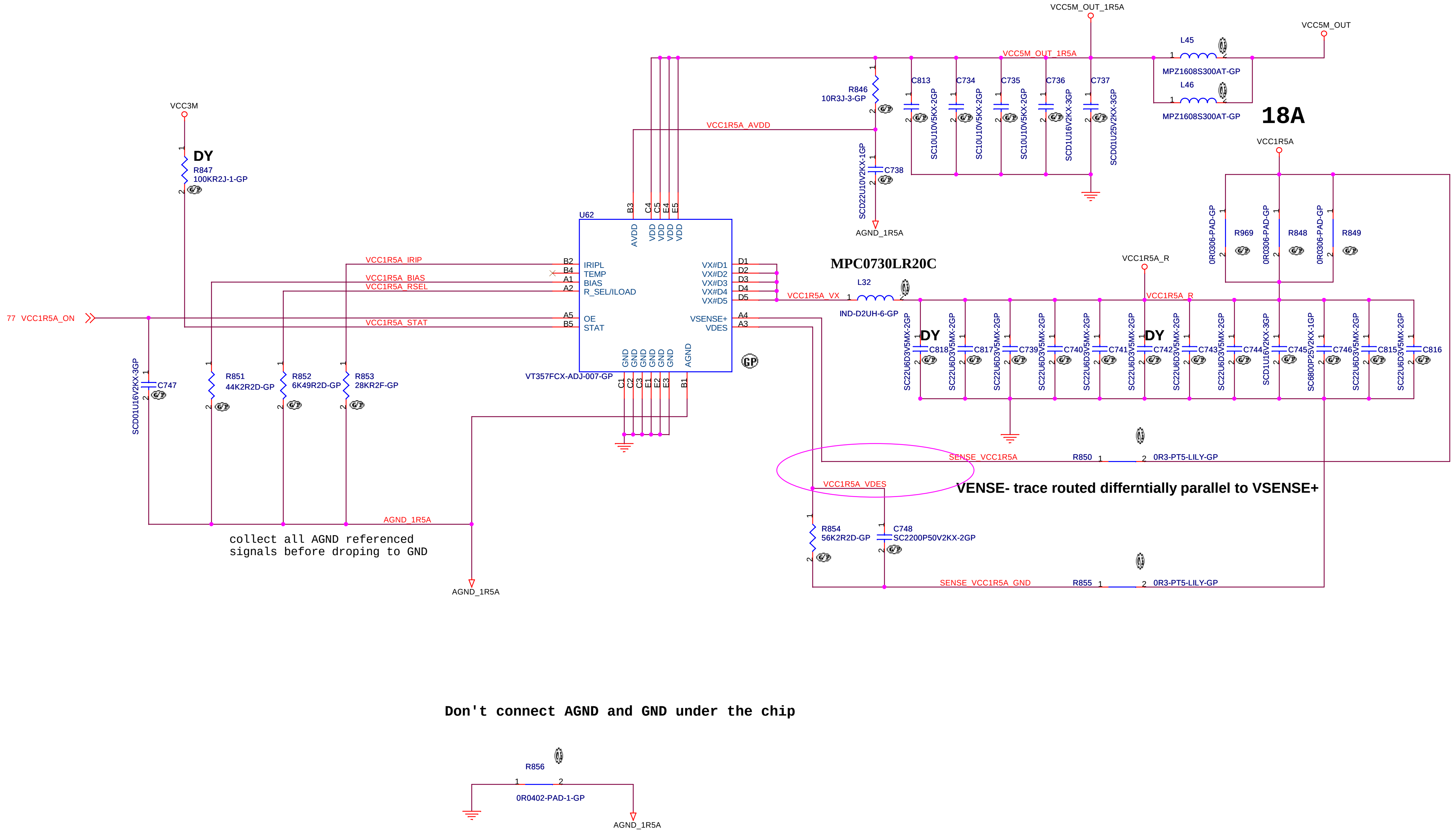

VCC5M_OUT_1R5A
VCC5M_OUT
L45
MPZ1608S300AT-GP
L46
MPZ1608S300AT-GP
18A
VCC1R5A
R846
10R3J-3-GP
C813
C734
C735
C736
C737
SC10U10V5KX-2GP
SC10U10V5KX-2GP
SC10U10V5KX-2GP
SCD1U16V2KX-3GP
SCD01U25V2KX-3GP
VCC1R5A_AVDD
C738
SCD22U10V2KX-1GP
AGND_1R5A
VCC3M
DY
R847
100KR2J-1-GP
U62
B3
C4
C5
E4
E5
AVDD
VDD
VDD
VDD
VDD
VCC1R5A_IRIP
VCC1R5A_BIAS
VCC1R5A_RSEL
VCC1R5A_STAT
B2
B4
A1
A2
A5
B5
IRIPL
TEMP
BIAS
R_SEL/ILOAD
OE
STAT
VX#D1
VX#D2
VX#D3
VX#D4
VX#D5
VSENSE+
VDES
D1
D2
D3
D4
D5
A4
A3
GND
GND
GND
GND
GND
GND
AGND
C1
C2
C3
E1
E2
E3
B1
VT357FCX-ADJ-007-GP
MPC0730LR20C
L32
IND-D2UH-6-GP
VCC1R5A_VX
VCC1R5A_R
R969
R848
R849
0R0306-PAD-GP
0R0306-PAD-GP
0R0306-PAD-GP
77 VCC1R5A_ON
C747
SCD01U16V2KX-3GP
R851
44K2R2D-GP
R852
6K49R2D-GP
R853
28KR2F-GP
DY
DY
C818
C817
C739
C740
C741
C742
C743
C744
C745
C746
C815
C816
SC22U6D3V5MX-2GP
SCD1U16V2KX-3GP
SC6800P25V2KX-1GP
SENSE_VCC1R5A
R850
0R3-PT5-LILY-GP
VCC1R5A_VDES
R854
56K2R2D-GP
C748
SC2200P50V2KX-2GP
SENSE_VCC1R5A_GND
R855
0R3-PT5-LILY-GP
AGND_1R5A
AGND_1R5A
R856
0R0402-PAD-1-GP
AGND_1R5A
GP

VENSE- trace routed differntially parallel to VSENSE+

collect all AGND referenced
signals before droping to GND

Don't connect AGND and GND under the chip

<Core Design>

緯創資通 **Wistron Corporation**
21F, 88, Sec.1, Hsin Tai Wu Rd., Hsichih,
Taipei Hsien 221, Taiwan, R.O.C.

Title
DC-DC VCC1R5A

Size A3
Document Number **Dasher-2**
Rev -1

Date: Friday, March 09, 2012
Sheet 85 of 101

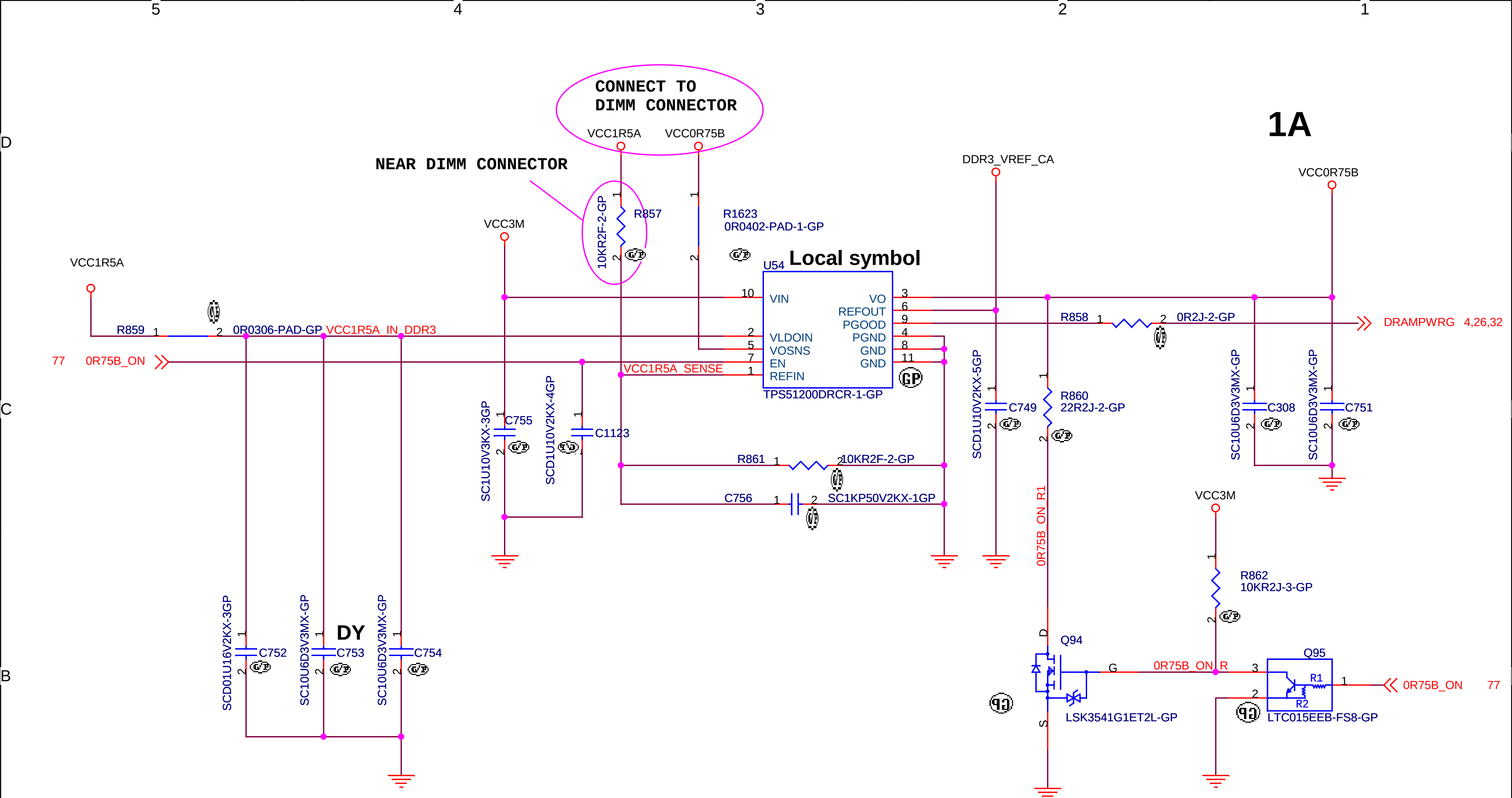
5
4
3
2
1
D
C
B
A
CONNECT TO
DIMM CONNECTOR
VCC1R5A
VCC0R75B
NEAR DIMM CONNECTOR
1A
DDR3_VREF_CA
VCC0R75B
VCC3M
R857
10KR2F-2-GP
R1623
0R0402-PAD-1-GP
U54
Local symbol
VCC1R5A
R859
0R0306-PAD-GP
VCC1R5A_IN_DDR3
77
0R75B_ON
VIN
VLDOIN
VOSNS
EN
REFIN
VO
REFOUT
PGOOD
PGND
GND
GND
TPS51200DRCR-1-GP
VCC1R5A_SENSE
R858
0R2J-2-GP
DRAMPWRG
4,26,32
C755
SC1U10V3KX-3GP
C1123
SCD1U10V2KX-4GP
C749
SCD1U10V2KX-5GP
R860
22R2J-2-GP
C308
SC10U6D3V3MX-GP
C751
SC10U6D3V3MX-GP
R861
10KR2F-2-GP
C756
SC1KP50V2KX-1GP
0R75B_ON_R1
VCC3M
R862
10KR2J-3-GP
Q94
LSK3541G1ET2L-GP
0R75B_ON_R
Q95
R1
R2
LTC015EEB-FS8-GP
0R75B_ON
77
C752
SCD01U16V2KX-3GP
C753
SC10U6D3V3MX-GP
DY
C754
SC10U6D3V3MX-GP
GP

<Core Design>

緯創資通

Wistron Corporation

21F, 88, Sec.1, Hsin Tai Wu Rd., Hsichih,
Taipei Hsien 221, Taiwan, R.O.C.

Title

DC-DC VCC0R75B

Size A4

Document Number **Dasher-2**

Rev **-1**

Date: Friday, March 09, 2012

Sheet 86 of 101

BLANK

<Variant Name>

緯創資通 **Wistron Corporation**
21F, 88, Sec.1, Hsin Tai Wu Rd., Hsichih,
Taipei Hsien 221, Taiwan, R.O.C.

Title	***BLANK***	
Size A4	Document Number **Dasher-2**	Rev **-1**
Date: Tuesday, February 21, 2012	Sheet 87 of 101	

BLANK

<Core Design>

緯創資通	**Wistron Corporation** 21F, 88, Sec.1, Hsin Tai Wu Rd., Hsichih, Taipei Hsien 221, Taiwan, R.O.C.

Title

BLANK

Size	Document Number	Rev
A4	**Dasher-2**	**-1**

Date: Tuesday, February 21, 2012 Sheet 88 of 101

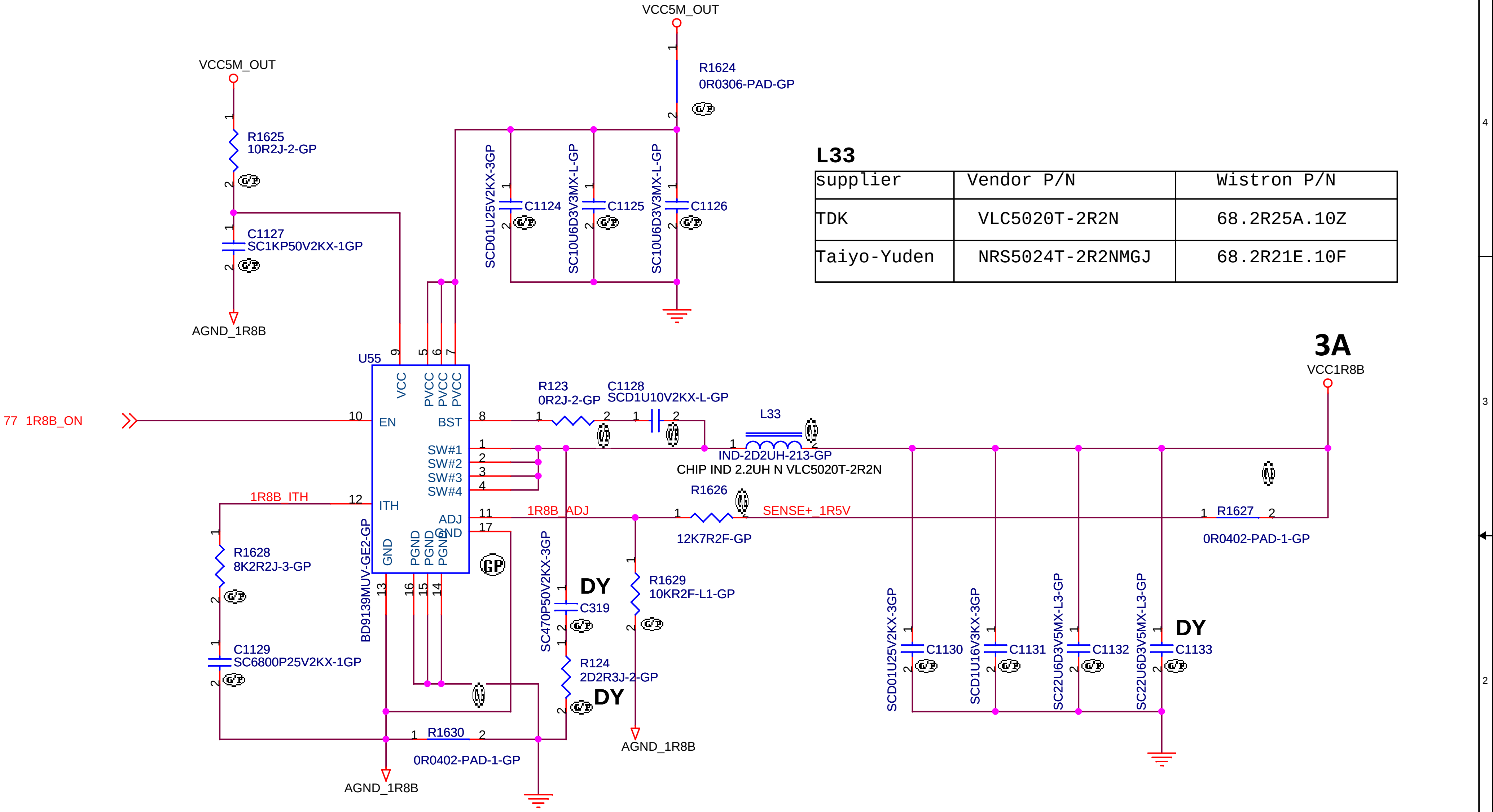
VCC5M_OUT
R1625
10R2J-2-GP
C1127
SC1KP50V2KX-1GP
AGND_1R8B
VCC5M_OUT
R1624
0R0306-PAD-GP
SCD01U25V2KX-3GP
C1124
SC10U6D3V3MX-L-GP
C1125
SC10U6D3V3MX-L-GP
C1126
U55
VCC
PVCC
PVCC
PVCC
EN
BST
SW#1
SW#2
SW#3
SW#4
ITH
ADJ
GND
GND
PGND
PGND
PGND
BD9139MUV-GE2-GP
GP
77 1R8B_ON
1R8B_ITH
R1628
8K2R2J-3-GP
C1129
SC6800P25V2KX-1GP
AGND_1R8B
R1630
0R0402-PAD-1-GP
R123
0R2J-2-GP
C1128
SCD1U10V2KX-L-GP
L33
IND-2D2UH-213-GP
CHIP IND 2.2UH N VLC5020T-2R2N
R1626
12K7R2F-GP
1R8B_ADJ
SENSE+_1R5V
SC470P50V2KX-3GP
DY
C319
R124
2D2R3J-2-GP
DY
R1629
10KR2F-L1-GP
AGND_1R8B
3A
VCC1R8B
R1627
0R0402-PAD-1-GP
SCD01U25V2KX-3GP
C1130
SCD1U16V3KX-3GP
C1131
SC22U6D3V5MX-L3-GP
C1132
SC22U6D3V5MX-L3-GP
DY
C1133

L33

supplier	Vendor P/N	Wistron P/N
TDK	VLC5020T-2R2N	68.2R25A.10Z
Taiyo-Yuden	NRS5024T-2R2NMGJ	68.2R21E.10F

<Core Design>

緯創資通 **Wistron Corporation**
21F, 88, Sec.1, Hsin Tai Wu Rd., Hsichih,
Taipei Hsien 221, Taiwan, R.O.C.

Title
DC-DC VCC1R8B

Size	Document Number	Rev
A4	Dasher-2	-1

Date: Friday, March 09, 2012 Sheet 89 of 101

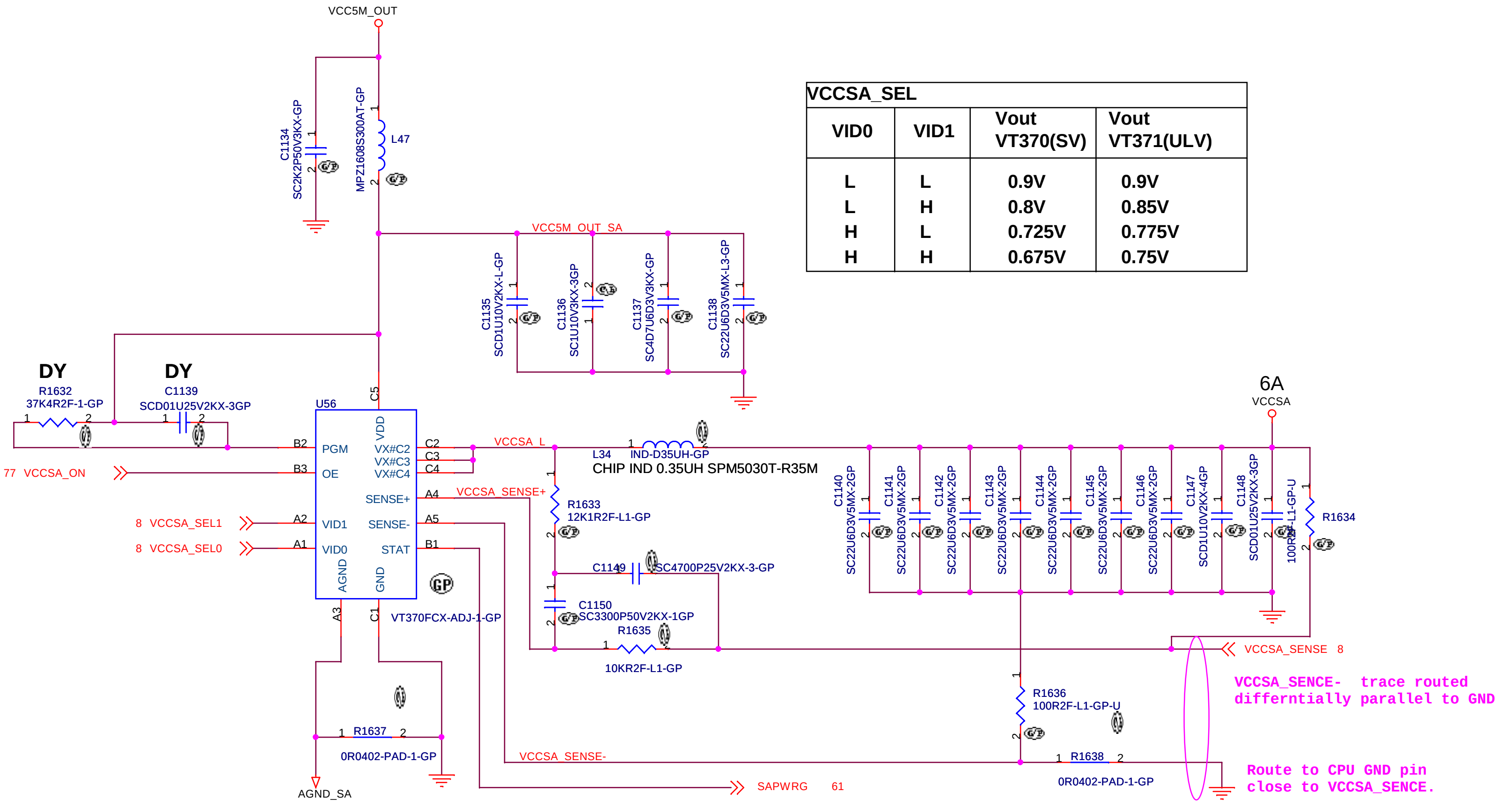
VCC5M_OUT
C1134
SC2K2P50V3KX-GP
MPZ1608S300AT-GP
L47
VCC5M_OUT_SA
C1135
SCD1U10V2KX-L-GP
C1136
SC1U10V3KX-3GP
C1137
SC4D7U6D3V3KX-GP
C1138
SC22U6D3V5MX-L3-GP
DY
R1632
37K4R2F-1-GP
DY
C1139
SCD01U25V2KX-3GP
U56
VDD
C5
PGM
B2
B3
OE
VX#C2
VX#C3
VX#C4
C2
C3
C4
SENSE+
A4
A2
VID1
SENSE-
A5
A1
VID0
STAT
B1
AGND
GND
A3
C1
VT370FCX-ADJ-1-GP
77 VCCSA_ON
8 VCCSA_SEL1
8 VCCSA_SEL0
VCCSA_L
L34
IND-D35UH-GP
CHIP IND 0.35UH SPM5030T-R35M
VCCSA_SENSE+
R1633
12K1R2F-L1-GP
C1149
SC4700P25V2KX-3-GP
C1150
SC3300P50V2KX-1GP
R1635
10KR2F-L1-GP
6A
VCCSA
C1140
SC22U6D3V5MX-2GP
C1141
SC22U6D3V5MX-2GP
C1142
SC22U6D3V5MX-2GP
C1143
SC22U6D3V5MX-2GP
C1144
SC22U6D3V5MX-2GP
C1145
SC22U6D3V5MX-2GP
C1146
SC22U6D3V5MX-2GP
C1147
SCD1U10V2KX-4GP
C1148
SCD01U25V2KX-3GP
100R2F-L1-GP-U
R1634
VCCSA_SENSE 8
R1636
100R2F-L1-GP-U
R1637
0R0402-PAD-1-GP
AGND_SA
VCCSA_SENSE-
R1638
0R0402-PAD-1-GP
SAPWRG 61
VCCSA_SENCE- trace routed differntially parallel to GND
Route to CPU GND pin close to VCCSA_SENCE.

VCCSA_SEL

VID0	VID1	Vout VT370(SV)	Vout VT371(ULV)
L	L	0.9V	0.9V
L	H	0.8V	0.85V
H	L	0.725V	0.775V
H	H	0.675V	0.75V

<Variant Name>

緯創資通 **Wistron Corporation**
21F, 88, Sec.1, Hsin Tai Wu Rd., Hsichih,
Taipei Hsien 221, Taiwan, R.O.C.

Title: ***DC/DC VCCSA***

Size: A3
Document Number: **Dasher-2**
Rev: -1

Date: Friday, March 09, 2012
Sheet 90 of 101

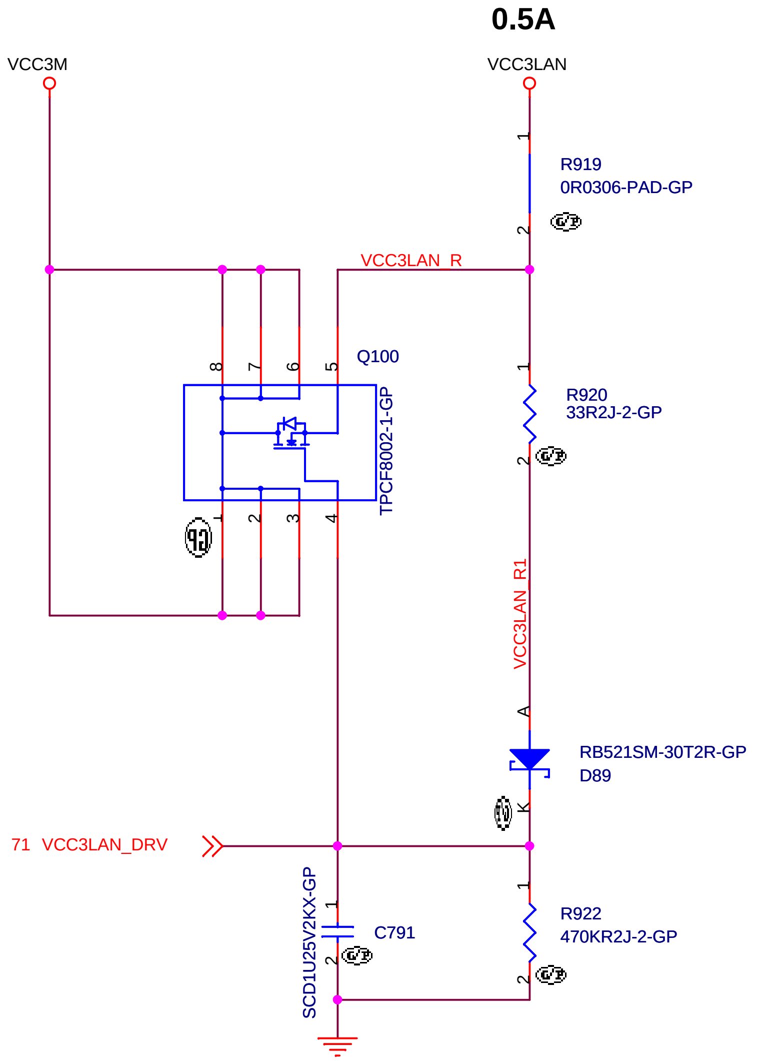
0.5A
VCC3M
VCC3LAN
1
R919
0R0306-PAD-GP
2
VCC3LAN_R
8
7
6
5
Q100
TPCF8002-1-GP
1
2
3
4
1
R920
33R2J-2-GP
2
VCC3LAN_R1
A
RB521SM-30T2R-GP
D89
K
71 VCC3LAN_DRV
1
C791
2
SCD1U25V2KX-GP
1
R922
470KR2J-2-GP
2

<Core Design>

緯創資通 **Wistron Corporation**
21F, 88, Sec.1, Hsin Tai Wu Rd., Hsichih,
Taipei Hsien 221, Taiwan, R.O.C.

Title	***LOAD SW LAN***	
Size A4	Document Number **Dasher-2**	Rev **-1**
Date: Friday, March 09, 2012	Sheet 91 of 101	

BLANK

<Variant Name>

緯創資通 **Wistron Corporation**
21F, 88, Sec.1, Hsin Tai Wu Rd., Hsichih,
Taipei Hsien 221, Taiwan, R.O.C.

Title	***BLANK***	
Size A4	Document Number **Dasher-2**	Rev **-1**
Date: Tuesday, February 21, 2012	Sheet 92 of 101	

D

C

B

A

B
L
A
N
K

<Core Design>

緯創資通 **Wistron Corporation**
21F, 88, Sec.1, Hsin Tai Wu Rd., Hsichih,
Taipei Hsien 221, Taiwan, R.O.C.

Title
BLANK

Size A4 Document Number **Dasher-2** Rev **-1**

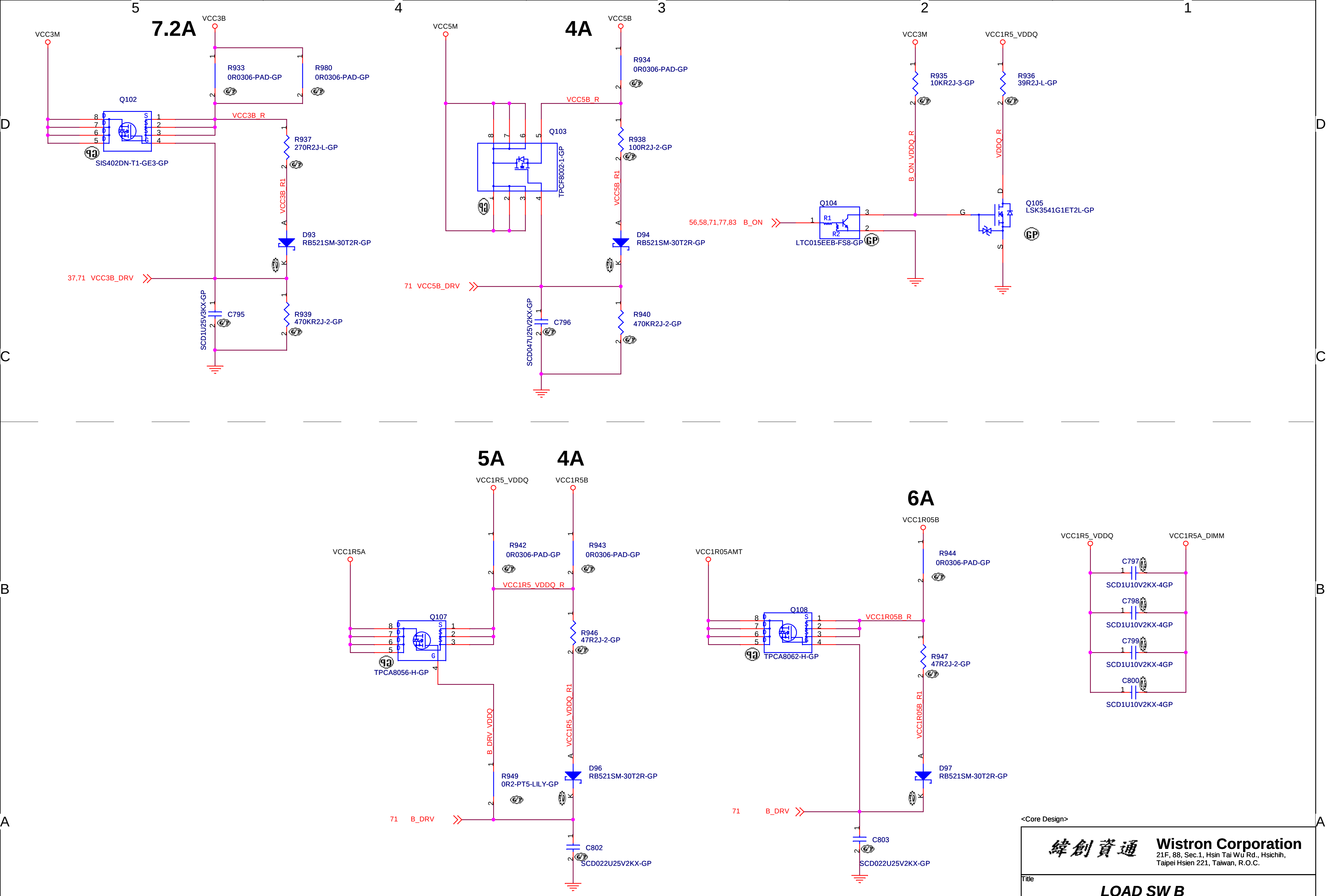
7.2A
VCC3M
VCC3B
R933
0R0306-PAD-GP
R980
0R0306-PAD-GP
Q102
SIS402DN-T1-GE3-GP
VCC3B_R
R937
270R2J-L-GP
VCC3B_R1
D93
RB521SM-30T2R-GP
37,71 VCC3B_DRV
C795
SCD1U25V3KX-GP
R939
470KR2J-2-GP
4A
VCC5M
VCC5B
R934
0R0306-PAD-GP
VCC5B_R
Q103
TPCF8002-1-GP
R938
100R2J-2-GP
VCC5B_R1
D94
RB521SM-30T2R-GP
71 VCC5B_DRV
C796
SCD047U25V2KX-GP
R940
470KR2J-2-GP
VCC3M
R935
10KR2J-3-GP
VCC1R5_VDDQ
R936
39R2J-L-GP
B_ON_VDDQ_R
VDDQ_R
Q104
LTC015EEB-FS8-GP
R1
R2
56,58,71,77,83 B_ON
Q105
LSK3541G1ET2L-GP
G
D
S
5A
4A
VCC1R5_VDDQ
VCC1R5B
R942
0R0306-PAD-GP
R943
0R0306-PAD-GP
VCC1R5A
VCC1R5_VDDQ_R
Q107
TPCA8056-H-GP
R946
47R2J-2-GP
B_DRV_VDDQ
VCC1R5_VDDQ_R1
R949
0R2-PT5-LILY-GP
D96
RB521SM-30T2R-GP
71 B_DRV
C802
SCD022U25V2KX-GP
6A
VCC1R05B
R944
0R0306-PAD-GP
VCC1R05AMT
Q108
TPCA8062-H-GP
VCC1R05B_R
R947
47R2J-2-GP
VCC1R05B_R1
D97
RB521SM-30T2R-GP
71 B_DRV
C803
SCD022U25V2KX-GP
VCC1R5_VDDQ
VCC1R5A_DIMM
C797
SCD1U10V2KX-4GP
C798
SCD1U10V2KX-4GP
C799
SCD1U10V2KX-4GP
C800
SCD1U10V2KX-4GP
5
4
3
2
1
D
C
B
A

<Core Design>

緯創資通 **Wistron Corporation**
21F, 88, Sec.1, Hsin Tai Wu Rd., Hsichih,
Taipei Hsien 221, Taiwan, R.O.C.

Title
LOAD SW B

Size A3 | Document Number **Dasher-2** | Rev -1

Date: Friday, March 09, 2012 | Sheet 94 of 101

B
L
A
N
K

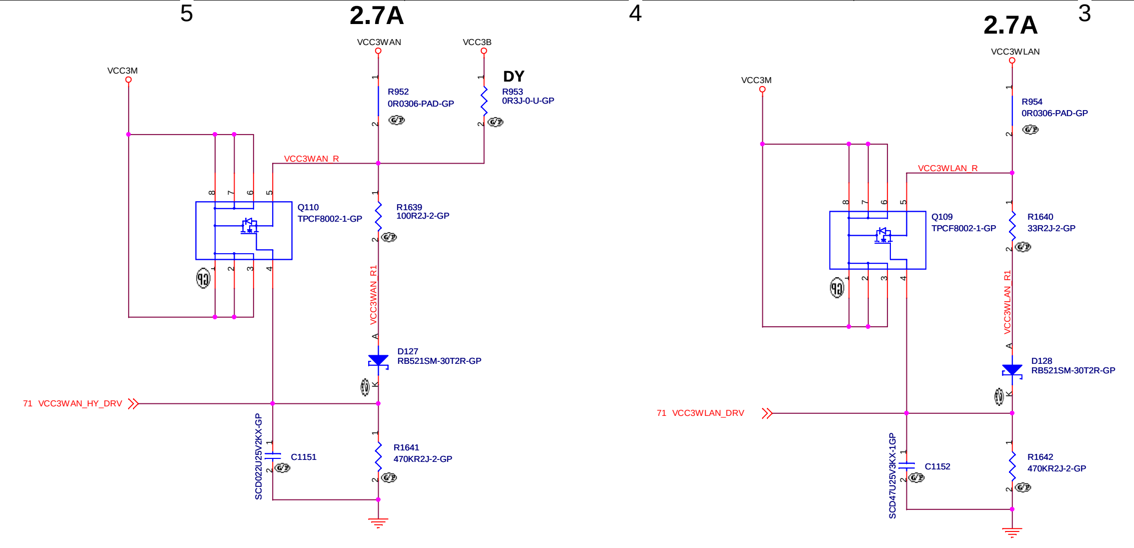
2.7A
VCC3WAN
VCC3B
VCC3M
DY
R952
0R0306-PAD-GP
R953
0R3J-0-U-GP
VCC3WAN_R
Q110
TPCF8002-1-GP
R1639
100R2J-2-GP
VCC3WAN_R1
D127
RB521SM-30T2R-GP
71 VCC3WAN_HY_DRV
C1151
SCD022U25V2KX-GP
R1641
470KR2J-2-GP
2.7A
VCC3WLAN
VCC3M
R954
0R0306-PAD-GP
VCC3WLAN_R
Q109
TPCF8002-1-GP
R1640
33R2J-2-GP
VCC3WLAN_R1
D128
RB521SM-30T2R-GP
71 VCC3WLAN_DRV
C1152
SCD047U25V3KX-1GP
R1642
470KR2J-2-GP

AOAC	YES	YES	No	No
Duplicity	YES	No	YES	No
Q110	ASM	ASM	ASM	DY
D127	ASM	ASM	ASM	DY
R1639	ASM	ASM	ASM	DY
R1641	ASM	ASM	ASM	DY
C1151	ASM	ASM	ASM	DY
R953	DY	DY	DY	ASM

↑
Logic

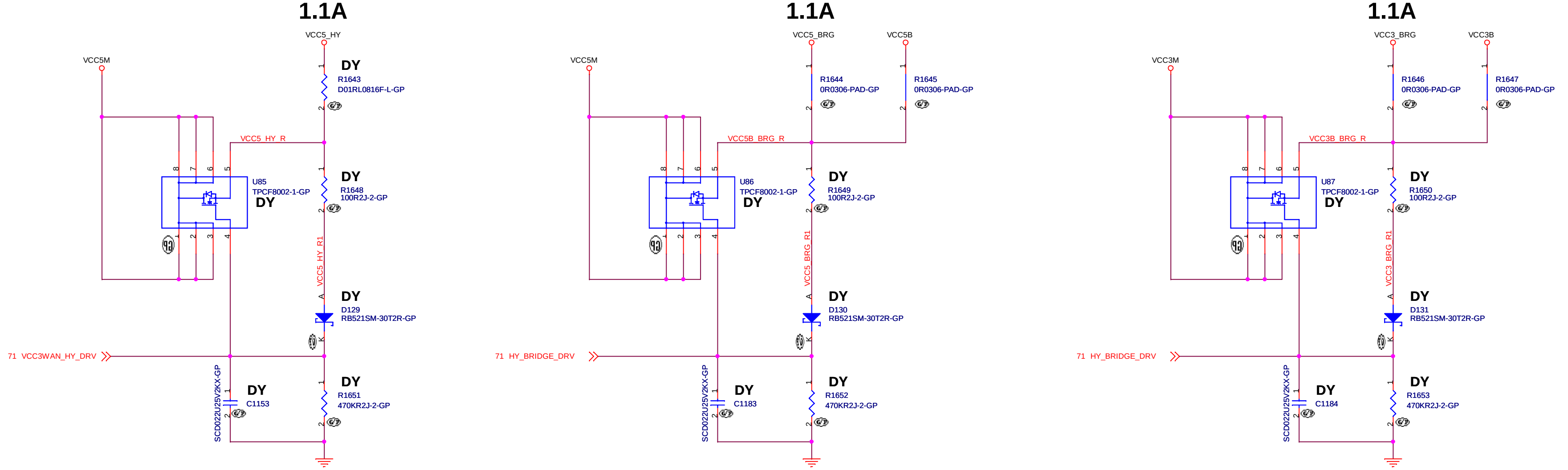
1.1A
VCC5_HY
VCC5M
DY
R1643
D01RL0816F-L-GP
VCC5_HY_R
U85
TPCF8002-1-GP
DY
R1648
100R2J-2-GP
VCC5_HY_R1
D129
RB521SM-30T2R-GP
71 VCC3WAN_HY_DRV
C1153
SCD022U25V2KX-GP
R1651
470KR2J-2-GP
1.1A
VCC5_BRG
VCC5B
VCC5M
R1644
0R0306-PAD-GP
R1645
0R0306-PAD-GP
VCC5B_BRG_R
U86
TPCF8002-1-GP
R1649
100R2J-2-GP
VCC5_BRG_R1
D130
RB521SM-30T2R-GP
71 HY_BRIDGE_DRV
C1183
SCD022U25V2KX-GP
R1652
470KR2J-2-GP
1.1A
VCC3_BRG
VCC3B
VCC3M
R1646
0R0306-PAD-GP
R1647
0R0306-PAD-GP
VCC3B_BRG_R
U87
TPCF8002-1-GP
R1650
100R2J-2-GP
VCC3_BRG_R1
D131
RB521SM-30T2R-GP
71 HY_BRIDGE_DRV
C1184
SCD022U25V2KX-GP
R1653
470KR2J-2-GP

<Core Design>

緯創資通 **Wistron Corporation**
21F, 88, Sec.1, Hsin Tai Wu Rd., Hsichih,
Taipei Hsien 221, Taiwan, R.O.C.

Title
LOAD SW WWAN & WLAN

Size Custom | Document Number **Dasher-2** | Rev -1

Date: Friday, March 09, 2012 | Sheet 96 of 101

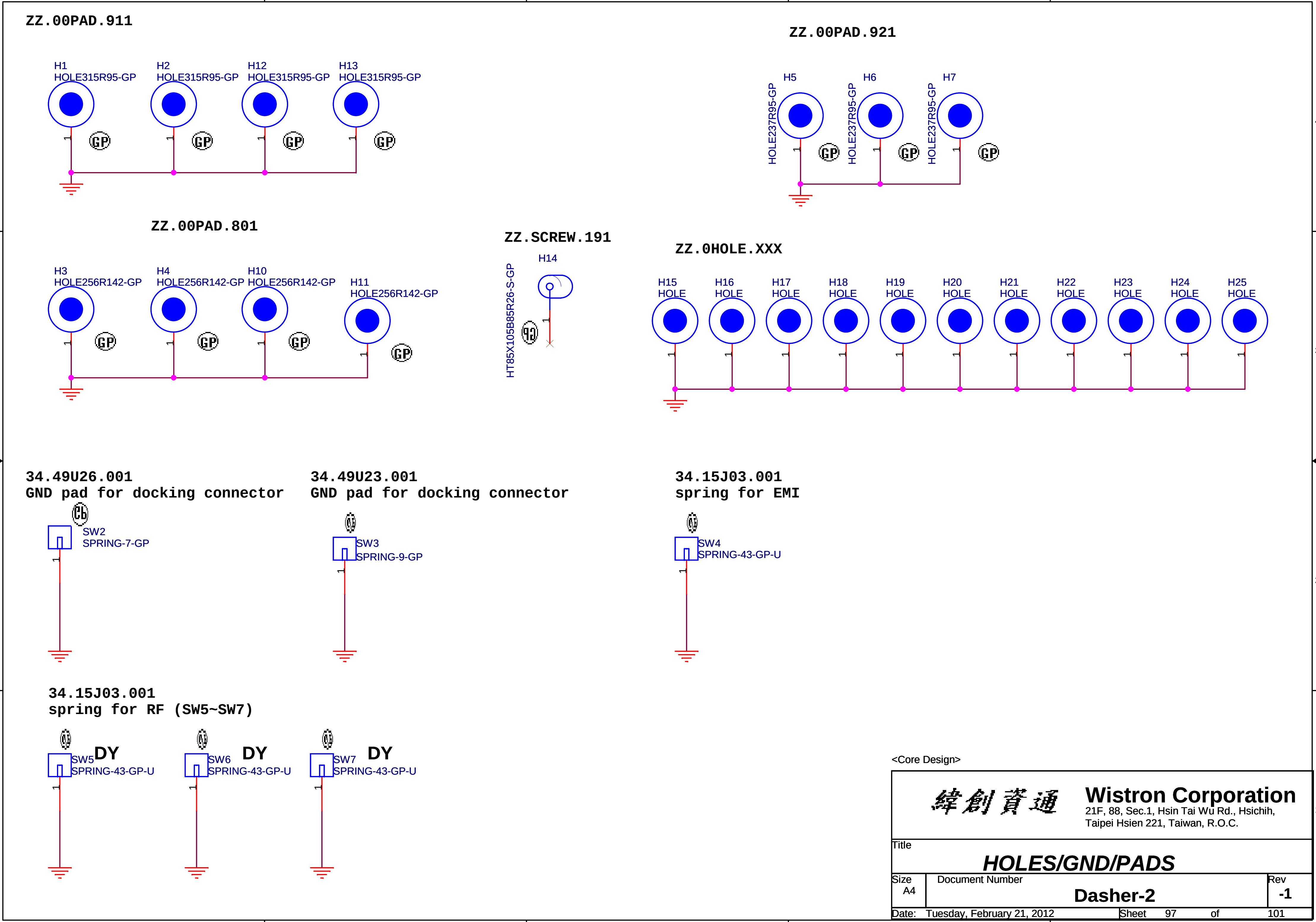
ZZ.00PAD.911
H1
HOLE315R95-GP
H2
HOLE315R95-GP
H12
HOLE315R95-GP
H13
HOLE315R95-GP
GP
ZZ.00PAD.921
H5
HOLE237R95-GP
H6
HOLE237R95-GP
H7
HOLE237R95-GP
ZZ.00PAD.801
H3
HOLE256R142-GP
H4
HOLE256R142-GP
H10
HOLE256R142-GP
H11
HOLE256R142-GP
ZZ.SCREW.191
H14
HT85X105B85R26-S-GP
ZZ.0HOLE.XXX
H15
HOLE
H16
HOLE
H17
HOLE
H18
HOLE
H19
HOLE
H20
HOLE
H21
HOLE
H22
HOLE
H23
HOLE
H24
HOLE
H25
HOLE
34.49U26.001
GND pad for docking connector
SW2
SPRING-7-GP
34.49U23.001
GND pad for docking connector
SW3
SPRING-9-GP
34.15J03.001
spring for EMI
SW4
SPRING-43-GP-U
34.15J03.001
spring for RF (SW5~SW7)
SW5
DY
SPRING-43-GP-U
SW6
DY
SPRING-43-GP-U
SW7
DY
SPRING-43-GP-U
A
B
C
D
E
1
2
3
4

<Core Design>

緯創資通 **Wistron Corporation**
21F, 88, Sec.1, Hsin Tai Wu Rd., Hsichih,
Taipei Hsien 221, Taiwan, R.O.C.

Title	**HOLES/GND/PADS**	
Size A4	Document Number **Dasher-2**	Rev **-1**
Date: Tuesday, February 21, 2012	Sheet 97 of 101	

Page	Parts	LPM2.0	LPM1.1	Disable
29	R289	ASM	ASM	DY
	R260	DY	DY	ASM
33	U69	ASM	ASM	DY
	C942	ASM	ASM	DY
	C943	ASM	ASM	DY
	C944	ASM	ASM	DY
	C945	ASM	ASM	DY
	R1340	ASM	ASM	DY
	R1341	ASM	ASM	DY
	Q127	ASM	ASM	DY
	Q128	ASM	ASM	DY
	C318	ASM	ASM	DY
	U68	ASM	ASM	DY
	C939	ASM	ASM	DY
	C940	ASM	ASM	DY
	C941	ASM	ASM	DY
	U70	ASM	ASM	DY
	U71	ASM	ASM	DY
	U72	ASM	ASM	DY
	C946	ASM	ASM	DY
	C947	ASM	ASM	DY
	C948	ASM	ASM	DY
	R1338	DY	DY	ASM
	R1339	DY	DY	ASM
	R1342	DY	DY	ASM
	R1330	DY	DY	ASM
	R1331	DY	DY	ASM
	R1332	DY	DY	ASM
	R1333	DY	DY	ASM
	R1334	DY	DY	ASM
	R1335	DY	DY	ASM
	R1336	DY	DY	ASM
	R1337	DY	DY	ASM
	CN26	ASM	ASM	DY
34	U73	ASM	ASM	DY
	U74	ASM	ASM	DY
	U75	ASM	ASM	DY
	R1343	DY	DY	ASM
	R1344	DY	DY	ASM
	R1345	DY	DY	ASM
	R1346	DY	DY	ASM

↑

LOGIC

Page	Parts	LPM2.0	LPM1.1	Disable
47	U78	ASM	ASM	DY
	U79	ASM	ASM	DY
	U80	ASM	ASM	DY
	U81	ASM	ASM	DY
	C994	ASM	ASM	DY
	C995	ASM	ASM	DY
	C19	ASM	ASM	DY
	R1366	DY	DY	ASM
	R1367	DY	DY	ASM
	R1368	DY	DY	ASM
	R1369	DY	DY	ASM
	R1370	DY	DY	ASM
	R1371	DY	DY	ASM
	R1372	DY	DY	ASM
53	U82	ASM	ASM	DY
	R404	DY	DY	ASM
	R405	DY	DY	ASM
	R1374	ASM	ASM	DY
	R1373	DY	DY	ASM
61	R1450	DY	DY	ASM
	R1420	ASM	ASM	DY
	R313	ASM	ASM	DY
	R117	DY	DY	ASM
62	Q131	ASM	ASM	DY
	D109	ASM	ASM	DY
	R1441	ASM	ASM	DY
	R1424	ASM	ASM	DY
	R1452	DY	DY	ASM
	R172	ASM	ASM	DY
	R1453	DY	DY	ASM
63	Q19	ASM	ASM	DY
64	Q11	DY	DY	DY
69	U83	ASM	ASM	DY
	U84	ASM	ASM	DY
	R1463	ASM	ASM	DY
	R1464	ASM	ASM	DY
	R1466	ASM	ASM	DY
	R1468	ASM	ASM	DY
	R901	DY	DY	Ref to P101
	R930	DY	DY	Ref to P101
	R536	DY	DY	Ref to P101
	R539	DY	DY	Ref to P101
	C1020	ASM	ASM	DY
	D111	Ref P101	Ref P101	DY
	U42	ASM	ASM	Ref to P101
	Q47	ASM	ASM	Ref to P101
	R617	ASM	ASM	Ref to P101
	C524	ASM	ASM	Ref to P101
	Q48	ASM	ASM	Ref to P101

↑

LOGIC

Page	Parts	LPM2.0	LPM1.1	Disable
70	R1490	ASM	ASM	DY
	R118	DY	ASM	DY
	R119	ASM	DY	DY
	R120	ASM	DY	DY
	R121	DY	ASM	DY
71	D118	ASM	ASM	DY
	D119	ASM	ASM	DY
	R37	ASM	ASM	DY
77	D20	ASM	ASM	Ref to P77
	R143	DY	DY	Ref to P77
96	R953	DY	DY	Ref p96 AOAC table
	Q110	ASM	ASM	Ref p96 AOAC table
	R1639	ASM	ASM	Ref p96 AOAC table
	R1641	ASM	ASM	Ref p96 AOAC table
	D127	ASM	ASM	Ref p96 AOAC table
	C1151	ASM	ASM	Ref p96 AOAC table
	U85	ASM	ASM	DY
	R1643	ASM	ASM	DY
	R1648	ASM	ASM	DY
	R1651	ASM	ASM	DY
	D129	ASM	ASM	DY
	C1153	ASM	ASM	DY
	R1645	DY	DY	ASM
	U86	ASM	ASM	DY
	R1649	ASM	ASM	DY
	R1652	ASM	ASM	DY
	D130	ASM	ASM	DY
	C1183	ASM	ASM	DY
	R1647	DY	DY	ASM
	U87	ASM	ASM	DY
	R1650	ASM	ASM	DY
	R1653	ASM	ASM	DY
	D131	ASM	ASM	DY
	C1184	ASM	ASM	DY

↑

LOGIC

<Core Design>

緯創資通 **Wistron Corporation**
21F, 88, Sec.1, Hsin Tai Wu Rd., Hsichih,
Taipei Hsien 221, Taiwan, R.O.C.

Title
LPM SELECT TABLE

Size A3 | Document Number **Dasher-2** | Rev -1

Date: Tuesday, February 28, 2012 | Sheet 98 of 101

RF decoupling caps

named as RFCxxx

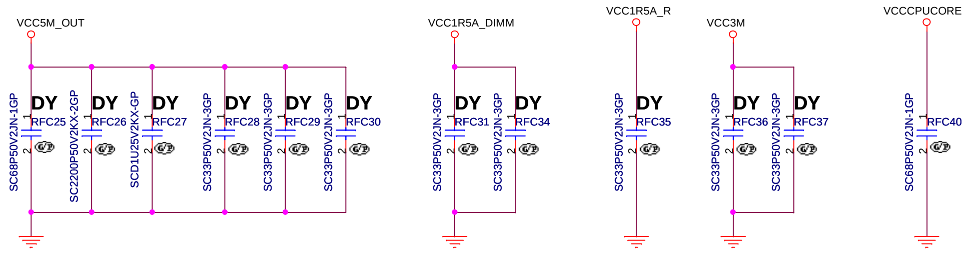
VCC5M_OUT
VCC1R5A_DIMM
VCC1R5A_R
VCC3M
VCCCPUCORE
DY
RFC25
SC68P50V2JN-1GP
RFC26
SC2200P50V2KX-2GP
RFC27
SCD1U25V2KX-GP
RFC28
SC33P50V2JN-3GP
RFC29
SC33P50V2JN-3GP
RFC30
SC33P50V2JN-3GP
RFC31
SC33P50V2JN-3GP
RFC34
SC33P50V2JN-3GP
RFC35
SC33P50V2JN-3GP
RFC36
SC33P50V2JN-3GP
RFC37
SC33P50V2JN-3GP
RFC40
SC68P50V2JN-1GP
1
2

Long power trace EMI decoupling caps

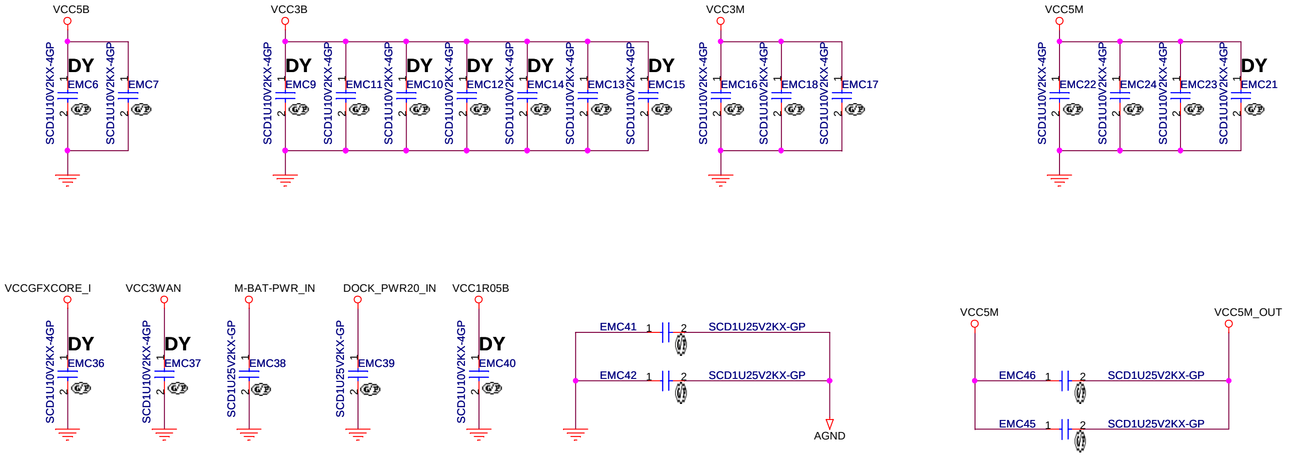
VCC5B
EMC6
EMC7
VCC3B
EMC9
EMC11
EMC10
EMC12
EMC14
EMC13
EMC15
VCC3M
EMC16
EMC18
EMC17
VCC5M
EMC22
EMC24
EMC23
EMC21
VCC5M_OUT
EMC26
EMC28
EMC27
EMC25
VCC1R5A_DIMM
EMC30
EMC32
EMC31
EMC29
VCC1R05B_VTT_CPU
EMC33
VCCCPUCORE
EMC34
VCCSA
EMC35
SCD1U10V2KX-4GP
DY
VCCGFXCORE_I
EMC36
VCC3WAN
EMC37
M-BAT-PWR_IN
EMC38
SCD1U25V2KX-GP
DOCK_PWR20_IN
EMC39
VCC1R05B
EMC40
EMC41
EMC42
SCD1U25V2KX-GP
AGND
VCC5M
VCC5M_OUT
EMC46
EMC45
1
2

<Core Design>

Wistron Corporation
21F, 88, Sec.1, Hsin Tai Wu Rd., Hsichih,
Taipei Hsien 221, Taiwan, R.O.C.

Title
EMI DECOUPLING

Size	Document Number	Rev
Custom	**Dasher-2**	-1

Date: Thursday, March 01, 2012 Sheet 99 of 101

		SV	ULV
Master IC	U48	VT1318M	VT1318M
# of slave for CPU		2	1
Slave for CPU	U47	VT1324S	VT1324S
	U49	VT1324S	no stuff
Inductor for CPU	L28	BPW10040	no stuff
	L14	no stuff	MPCH0730LR12
# of slave for GPU		1	1
Slave for GPU	U50	VT1324S	VT1324S
Inductor for GPU	L29	MPCH0730LR12	MPCH0730LR12

			SV		ULV	
R_SEL[0]	pin 38	R1574	715	0.5%	280	1.0%
R_SEL[1]	pin 37	R1575	887	0.5%	825	0.5%
R_SEL[2]	pin 36	R1576	0	5.0%	0	5.0%
R_SEL[3]	pin 35	R1577	196	0.5%	196	0.5%
R_SEL[4]	pin 44	R1571	825	0.5%	825	0.5%
R_SEL[5]	pin 32	R1579	475	1.0%	402	0.5%
R_SEL[6]	pin 48	R1567	21.5	1.0%	21.5	1.0%
R_REF	pin 34	R1578	20K	0.5%	20K	0.5%
ROSC	pin 39	R1572	75K	1.0%	61.9K	1.0%

			SV		ULV	
LL_R1_CPU	pin 15 - pin 16	R1599	10K	0.5%	10K	0.5%
LL_R2_CPU	pin 16 - pin 17	R1600	20K	0.5%	7.5K	0.5%
	pin 16 - pin 17	R1601	787	1.0%	453	1.0%
LL_C1_CPU	pin 15 - pin 16	C1086	56pF		33pF	
LL_C2_CPU	pin 16 - pin 17	C1087	22pF		22pF	
LL_RLEAD_CPU	pin 15 - pin 16	R1595	30.1K	1.0%	15K	1.0%
LL_CLEAD_CPU	pin 15 - pin 16	C1091	220pF		680pF	
LL_RLAG_CPU	pin 16 - pin 17	R1596	no stuff		no stuff	
LL_CLAG_CPU	pin 16 - pin 17	C1092	no stuff		no stuff	
RDES_CPU	pin 17 - pin 18	R1592	845	0.5%	487	0.5%
RINT_CPU	pin 18 - pin 19	R1593	1.3K	1.0%	2.74K	1.0%
CINT_CPU	pin 18 - pin 19	C1088	4700PF		3300pF	
RPH11	IPH1_1 - pin 18	R1598	499	1.0%	750	1.0%
RPH12	IPH1_2 - pin 18	R1594	499	1.0%	no stuff	1.0%
IPHF11_R	pin 11	R1582	1.96K	1.0%	1.96K	1.0%
IPHF11_C	pin 11	C1076	10pF		no stuff	
IPHF12_R	pin 10	R1581	1.96K	1.0%	no stuff	1.0%
IPHF12_C	pin 10	C1075	10pF		no stuff	
R_MRAMP1	pin 12	R1584	15.8K	1.0%	13K	1.0%
R_MRAMP1_PU	pin 12	R1587	60.4K	1.0%	43.2K	1.0%
R_PWM2	Pin 6	R4	no stuff		0	5.0%
LL_R1_GPU	pin 24 - pin 23	R1609	10K	0.5%	10K	0.5%
LL_R2_GPU	pin 23 - pin 22	R1610	7.5K	0.5%	7.87K	0.5%
	pin 23 - pin 22	R1611	237	1.0%	0	5.0%
LL_C1_GPU	pin 24 - pin 23	C1094	22pF		22pF	
LL_C2_GPU	pin 23 - pin 22	C1095	22pF		22pF	
LL_RLEAD_GPU	pin 24 - pin 23	R1606	30K	1.0%	30K	1.0%
LL_CLEAD_GPU	pin 24 - pin 23	C1097	1200pF		1000pF	
LL_RLAG_GPU	pin 23 - pin 22	R1607	no stuff		no stuff	
LL_CLAG_GPU	pin 23 - pin 22	C1098	no stuff		no stuff	
RDES_GPU	pin 22 - pin 21	R1604	665	0.5%	665	0.5%
RINT_GPU	pin 21 - pin 20	R1605	3.24K	1.0%	3.24K	1.0%
CINT_GPU	pin 21 - pin 20	C1096	10nF		10nF	
RPH21	IPH2_1 - pin 21	R1608	1K	1.0%	1K	1.0%
IPHF21_R	pin 28	R1580	1.96K	1.0%	1.96K	1.0%
IPHF21_C	pin 28	C1077	no stuff		no stuff	
R_MRAMP2	pin 27	R1586	15.4K	1.0%	15.4K	1.0%
R_MRAMP2_PU	pin 27	R1590	56.2K	1.0%	56.2K	1.0%

			SV	ULV
		C1090	4.7uF	no stuff
		R1589	10 1.0%	no stuff
		C1089	0.1uF	no stuff
		C1082	0.22uF	no stuff
		C1083	1uF	no stuff
		C1080	1uF	no stuff
		C1084	10uF	no stuff
		C1079	10uF	no stuff
		C1081	10uF	no stuff
		C1085	10uF	no stuff
		L50	MPZ1608S300A	no stuff
		L51	MPZ1608S300A	no stuff
		C1078	2200pF	no stuff

Vcore Coutput

	SV		ULV	
C687	22uF	0805	22uF	0805
C669	22uF	0603	22uF	0603
C671	22uF	0603	22uF	0603
C673	4.7uF	0603	22uF	0603
C675	22uF	0603	22uF	0603
C676	22uF	0603	22uF	0603
C678	22uF	0603	22uF	0603
C695	4.7uF	0603	22uF	0603
C681	4.7uF	0603	22uF	0603
C682	4.7uF	0603	22uF	0603
C683	22uF	0603	22uF	0603
C750	22uF	0603	22uF	0603
C686	22uF	0603	22uF	0603
C691	22uF	0603	22uF	0603
C670	22uF	0603	22uF	0603
C694	22uF	0603	22uF	0603
C698	4.7uF	0603	22uF	0603
C1112	22uF	0603	22uF	0603
C1113	22uF	0603	22uF	0603
C672	22uF	0603	22uF	0603
C1157	22uF	0603	22uF	0603
C674	22uF	0603	22uF	0603
C1160	22uF	0603	22uF	0603
C689	22uF	0603	22uF	0603
C1167	22uF	0603	22uF	0603
C680	22uF	0603	22uF	0603
C679	4.7uF	0603	10uF	0603
C677	4.7uF	0603	10uF	0603
C1156	4.7uF	0603	10uF	0603
C684	10uF	0603	10uF	0603
C693	4.7uF	0603	10uF	0603
C1159	10uF	0603	10uF	0603
C692	10uF	0603	10uF	0603
C1158	4.7uF	0603	10uF	0603
C1161	4.7uF	0603	10uF	0603
C1162	4.7uF	0603	10uF	0603
C690	N/A	0603	N/A	0603
C1109	N/A	0603	N/A	0603
C1110	N/A	0603	N/A	0603
C1111	N/A	0603	N/A	0603
C1163	N/A	0603	N/A	0603
C1164	22uF	0603	N/A	0603
C1165	N/A	0603	N/A	0603
C1166	22uF	0603	N/A	0603
C1168	N/A	0603	N/A	0603
C1169	22uF	0603	N/A	0603
C444	2.2uF	0402	2.2uF	0402
C445	2.2uF	0402	2.2uF	0402
C446	2.2uF	0402	2.2uF	0402
C447	2.2uF	0402	2.2uF	0402
C448	2.2uF	0402	2.2uF	0402
C449	2.2uF	0402	2.2uF	0402
C450	2.2uF	0402	N/A	0402
C451	2.2uF	0402	2.2uF	0402
C452	2.2uF	0402	2.2uF	0402
C453	2.2uF	0402	2.2uF	0402

	SV		ULV	
C477	2.2uF	0402	2.2uF	0402
C486	2.2uF	0402	2.2uF	0402
C518	2.2uF	0402	2.2uF	0402
C520	2.2uF	0402	2.2uF	0402
C521	2.2uF	0402	2.2uF	0402
C522	2.2uF	0402	N/A	0402
C533	2.2uF	0402	2.2uF	0402
C830	2.2uF	0402	2.2uF	0402
C831	2.2uF	0402	2.2uF	0402
C832	2.2uF	0402	2.2uF	0402
C1172	N/A	0402	N/A	0402
C1173	2.2uF	0402	N/A	0402
C1174	2.2uF	0402	N/A	0402
C1175	2.2uF	0402	N/A	0402
C1176	N/A	0402	N/A	0402
C1177	N/A	0402	N/A	0402
C1178	2.2uF	0402	2.2uF	0402
C1179	2.2uF	0402	2.2uF	0402
C1180	2.2uF	0402	2.2uF	0402
C1181	2.2uF	0402	2.2uF	0402
C1182	2.2uF	0402	2.2uF	0402
C1185	2.2uF	0402	2.2uF	0402
C1186	2.2uF	0402	2.2uF	0402
C1187	2.2uF	0402	2.2uF	0402
C1188	2.2uF	0402	2.2uF	0402
C1189	2.2uF	0402	2.2uF	0402
C1190	2.2uF	0402	2.2uF	0402
C1191	2.2uF	0402	2.2uF	0402
C1192	2.2uF	0402	2.2uF	0402
C1193	2.2uF	0402	2.2uF	0402
C1194	2.2uF	0402	2.2uF	0402
C1195	2.2uF	0402	2.2uF	0402
C1196	2.2uF	0402	2.2uF	0402

<Core Design>

緯創資通 Wistron Corporation
21F, 88, Sec.1, Hsin Tai Wu Rd., Hsichih,
Taipei Hsien 221, Taiwan, R.O.C.

Title **VT1318M TABLE**

Size A2
Document Number **Dasher-2**
Rev -1

Date: Tuesday, March 06, 2012

	Capability											
Config	1	2	3	4	5	6	7	8	9	10	11	12
AOAC	Yes	Yes	Yes	Yes	No	No	No	No	Yes	No	Yes	No
Anti-Theft	Yes	Yes	No	No	Yes	Yes	No	No	Yes	Yes	No	No
External EEPROM	Yes	No	Yes	No	Yes	No	Yes	No	Yes	Yes	Yes	Yes
Duplicity	No	No	No	No	No	No	No	No	Yes	Yes	Yes	Yes
U66	ASM	ASM	DY	DY	DY	DY	DY	DY	ASM	ASM	DY	DY
U67	ASM	ASM	DY	DY	DY	DY	DY	DY	ASM	ASM	DY	DY
C864	ASM	ASM	DY	DY	DY	DY	DY	DY	ASM	ASM	DY	DY
R978	ASM	ASM	DY	DY	DY	DY	DY	DY	ASM	ASM	DY	DY
R929	ASM	ASM	DY	DY	DY	DY	DY	DY	ASM	ASM	DY	DY
R901	ASM	ASM	DY	DY	DY	DY	DY	DY	ASM	ASM	DY	DY
R930	ASM	ASM	DY	DY	DY	DY	DY	DY	ASM	ASM	DY	DY
R1462	ASM	ASM	DY	DY	DY	DY	DY	DY	ASM	ASM	DY	DY
Q14	ASM	DY	DY	DY	DY	DY	DY	DY	ASM	ASM	DY	DY
Q48	ASM	DY	ASM	DY	ASM	DY	ASM	DY	ASM	ASM	ASM	ASM
R624	ASM	DY	ASM	DY	ASM	DY	ASM	DY	ASM	ASM	ASM	ASM
R536	DY	DY	DY	DY	ASM	ASM	DY	DY	DY	DY	DY	DY
R539	DY	DY	DY	DY	ASM	ASM	DY	DY	DY	DY	DY	DY
U42	ASM	DY	ASM	DY	ASM	DY	ASM	DY	ASM	ASM	ASM	ASM
Q47	ASM	DY	ASM	DY	ASM	DY	ASM	DY	ASM	ASM	ASM	ASM
R617	ASM	DY	ASM	DY	ASM	DY	ASM	DY	ASM	ASM	ASM	ASM
C524	ASM	DY	ASM	DY	ASM	DY	ASM	DY	ASM	ASM	ASM	ASM
D111	DY	DY	DY	DY	DY	DY	DY	DY	ASM	ASM	DY	DY
R1463	DY	DY	DY	DY	DY	DY	DY	DY	ASM	ASM	ASM	ASM
R1464	DY	DY	DY	DY	DY	DY	DY	DY	ASM	ASM	ASM	ASM
U83	DY	DY	DY	DY	DY	DY	DY	DY	ASM	ASM	ASM	ASM
U84	DY	DY	DY	DY	DY	DY	DY	DY	ASM	ASM	ASM	ASM
C1020	DY	DY	DY	DY	DY	DY	DY	DY	ASM	ASM	ASM	ASM
R1466	DY	DY	DY	DY	DY	DY	DY	DY	ASM	ASM	ASM	ASM
R1468	DY	DY	DY	DY	DY	DY	DY	DY	ASM	ASM	ASM	ASM

↑

Logic

Duplicity	Y	Y	N	N
Battery Authentification	Y	N	Y	N
--> External EEPROM	Y	Y	Y	N

↑

Logic

<Core Design>

緯創資通
Wistron Corporation
21F, 88, Sec.1, Hsin Tai Wu Rd., Hsichih,
Taipei Hsien 221, Taiwan, R.O.C.

Title
SMBus Logic Table

Size A3
Document Number **Dasher-2**
Rev **-1**

Date: Tuesday, February 21, 2012
Sheet 101 of 101